

DOOR OPERATORS AND SMART HOME SYSTEMS

Garage door operators, hinged gate and sliding gate operators, Hörmann homee

HÖRMANN


27









Content

4 Good reasons to try Hörmann

16 Technology, equipment, accessories

16 Garage door operators ProMatic 4

18 Garage door operators SupraMatic 4

20 Garage door operator SupraMatic H4

22 Operator boom

24 Hinged gate operators RotaMatic

26 Hinged gate operators VersaMatic

28 Sliding door operators LineaMatic

30 Sliding door operator STA 500 FU

31 Accessories for hinged and sliding doors

32 Smart Home

40 Accessories

48 Technical data

Responsibility for generations

The Hörmann family business has over 90 years of experience as a construction component specialist. This gives us an obligation to both current and future generations. That's why environmental responsibility plays such an important role for us. To this end, we develop products and processes that conserve resources and reduce emissions.



“A GOOD REPUTATION MUST BE EARNED.”

August Hörmann

In keeping with the tradition started by the company’s founder, the Hörmann brand is a true promise of quality and, with sales of over 20 million doors, door frames and operators, is one of Europe’s most successful suppliers. Due to the comprehensive international sales and service network, Hörmann is your strong partner for high-quality construction components.



REDUCING EMISSIONS, CONSERVING RESOURCES. As a family business, we are very conscious of our responsibility to future generations. Hörmann’s sustainability strategy aims to reduce and avoid greenhouse gas emissions. To ensure we have a valid data set, we calculate our company’s carbon footprint every year. We meet 100% of our electrical power needs at all our European production sites using green electricity sourced from renewable sources. Through a range of measures, we are reducing our emissions and thereby saving more than 75000 tonnes of CO_2 each year. In addition, we provide support for climate protection projects and thereby perform CO_2 offsetting. Currently, for example, we offset more than 550000 tonnes of CO_2 per year. This corresponds to the emissions generated by the procurement, production and distribution of Hörmann products for residential construction. We offer our customers the opportunity to play an active part: if they wish, when buying our products for commercial and industrial construction, they can also make a contribution to climate protection projects.

ClimatePartner certified product
climate-id.com/XNEBKC

ClimatePartner certified product
climate-id.com/FYZNUF

Brand quality made in Germany

The family-owned company Hörmann offers all important construction components for building and renovating projects from a single source. We manufacture in highly specialised factories using state-of-the-art production technologies. Our employees work intensively on new products, continual further developments and improvements to details. The results are patents and one-of-a-kind products you can depend on.












5-year warranty*

LONG-LASTING. GUARANTEED. All major door and operator components are developed and manufactured by Hörmann. Endurance tests under real conditions ensure mature series products with Hörmann quality. Thanks to this and uncompromising quality assurance, you receive a 5-year warranty on Hörmann operators*.

* The complete warranty conditions can be found at: www.hormann.co.uk

Reliable door travel speed

GARAGE DOOR OPERATORS WITH HIGH TORQUE. The door travel speeds are significantly reduced under load with conventional garage door operators with transformers compared to Hörmann garage door operators with switching power supply. The advantage is that even large and heavy garage doors open quickly and reliably with Hörmann garage door operators.

Depending on the door size and weight; garage door operators require a certain amount of pull force to open the door smoothly and quickly. A very high pull force is required for large or heavy/ sluggish doors. For operators with transformers, this significantly reduces the opening and closing speed and impairs operation. Hörmann garage door operators with switching power supply still open quickly and reliably even under these conditions.

SupraMatic E4 example illustration

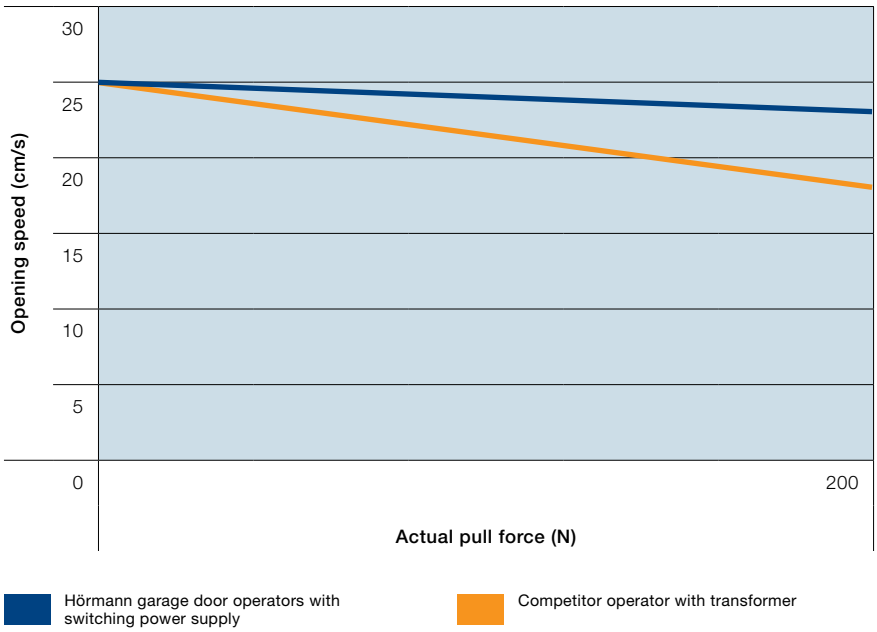

Reliable and safe function

Hörmann garage and entrance gate operators offer more convenience and intelligent technology. The automatic safety cut-out stops the door securely and reliably if it encounters an obstacle. Your door opens and closes quietly and smoothly with the soft start and soft stop, thereby protecting the door and operator mechanism.





Garage door operator SupraMatic H4

GARAGE DOOR OPERATORS. The 4th generation of operators, and in particular the SupraMatic H4 premium operator, impresses with its fast door opening and smart features. The LED lighting illuminates your garage evenly and makes getting in and out of the car easier. And thanks to the ProMatic Akku, you can enjoy all the benefits of an automatic operator in garages without a power connection.

➔ Further information can be found starting on page 16.



Hinged gate operator RotaMatic

ENTRANCE GATE OPERATORS. Enjoy maximum operator comfort as soon as you access your property and equip your hinged or sliding gate with a remote-controlled operator. The additional functions offer you extra convenience. Upon request, your door closes automatically* or opens only partially for practical pedestrian passage.

➔ For further information, see from page 24.

Tested and certified

CERTIFIED SAFETY FOR YOU AND YOUR FAMILY.
Hörmann garage and entrance gate operators open and close reliably in every phase and have been tested and certified by independent test institutes. All garage door operators are optimally matched to Hörmann garage doors. The operating forces for entrance gate operators RotaMatic, VersaMatic and LineaMatic have been tested and certified for standard door sizes and fitting situations in accordance with DIN EN 13241-1.

* Optional photocell required

Convenient opening and secure closing

No one likes to get out of their car in windy or rainy weather or in the middle of the night, just to open the garage door. A Hörmann garage door operator allows you to open your door quickly, conveniently and safely from your car and drive into a brightly lit garage. Once your door is closed, the mechanical anti-lift kit prevents intruders from entering your house through the garage or taking items from the garage.



Opening speed up to max. 28 cm/s

SUPER-FAST. You can enter faster and more safely with the SupraMatic garage door operators when combined with a Hörmann sectional garage door. An opening speed of max. 28 cm/s means more safety and less stress on high-traffic garage entrances.

➔ Further information can be found starting on page 18.

Anti-lift kit as standard

Only from Hörmann
Mechanical operator boom locking

SECURELY CLOSED. Burglars have a tough time when it comes to Hörmann automatic garage doors: when the garage door is closed, the anti-lift kit automatically engages in the boom‘s stop. The door locks immediately and is secured against forced opening. This lock is purely mechanical and, in contrast to operators from other manufacturers, effective even in the event of a power failure.

➔ Watch the video on YouTube or www.hormann.co.uk/media-centre
➔ Further information can be found starting on page 22.

Operator light as standard

BRIGHTLY LIT. Thanks to the standard LED lighting, you drive into a bright and welcoming garage, so you can enter and exit safely with ease. Do you also use your garage as a workshop, or would you like even brighter interior lighting? In that case, we recommend LED stripes, which can be easily attached to the gate’s boom using a magnetic strip and will illuminate your garage with light as bright as daylight.

➔ Further information can be found starting on page 45.

LEFT SIDE. A very bright and evenly lit garage thanks to the SupraMatic H4 garage door operator and optional LED-Stripes.

More convenience for your home

Hörmann operator accessories are characterised by innovative technology and exclusive design – the ideal combination for everyone who values perfection. Do you want maximum comfort? Then we have the right accessories to meet all requests and needs. All operators, receivers and control elements with BiSecur radio technology are 100% compatible with each other and perfectly aligned.





Convenient door opening using your fingerprint with the radio finger-scan FFL 25 BS

BiSecur

Only from Hörmann

CERTIFIED SECURITY. The bidirectional radio system BiSecur with particularly secure encryption protocol and stable, interference-free range makes sure that no one can copy your radio signal. This is also confirmed by independent safety experts.

➔ Watch the video on YouTube or
www.hormann.co.uk/media-centre



The green LED on the hand transmitter HS 5 BS indicates that your door is closed. The LED lights up red when the door is open. (shown in full-scale)

INTELLIGENT ACCESSORIES. You no longer have to go out in any wind and weather to check if your door is closed. At the press of a button, the colour of the LED on the hand transmitter HS 5 BS or the internal push button FIT 5 BS indicates the door position. If required, another push of a button* closes the door. You can also check whether your garage door is open or closed at any time on your smartphone using the Hörmann homee or Hörmann BlueSecur apps. It is the most convenient and secure way to control your door.

* Installation of photocell is required for impulse control without view of the door or if the automatic timer is activated!

➔ Further information can be found starting on page 40.

Intelligent operating comfort

Control your garage door and entrance gate operators, entrance door locks, lights and other devices simply, safely and conveniently via hand transmitter, radio switch or smartphone. Are your residential internal doors equipped with a Hörmann PortaMatic door operator? Then you can use those accessories to conveniently open and close these doors too.



SMART APP OPERATION. With the Hörmann BlueSecur app, you have your door and door opener with you on your smartphone or smartwatch at all times, as well as in your vehicle via Apple CarPlay or Android Auto (see fig. on page 14). Transfer permanent or temporary user permissions* to other smartphones. Your children or your spouse do not have to take a key with them, and your neighbour can enter your house to water your plants while you are away on holiday.

* Extra purchases (in-app purchases) in the AppStore or Google Play may be required

FLEXIBLE SMART HOME SYSTEM. With the Hörmann homee Brain Smart Home control centre, you can open and close your Hörmann doors and gates even more conveniently – quite simply by using your smartphone, tablet or via voice control. In addition, the system is extremely safe, easy to use and can be extended with other compatible devices such as security cameras, weather stations, lighting, switches, heating thermostats, roller shutters and blinds, smoke and movement detectors, or window and door contacts.

➔ Watch the video on YouTube or www.hormann.co.uk/media-centre
➔ Further information can be found starting on page 32.

With the Smart Home control centre Hörmann homee, you can control all door functions via your tablet or smartphone.



With the internal push button IT 3b-1 Motion, the operator light switches on automatically when you enter your garage.



ProMatic 4

Garage door operators

PREMIUM QUALITY AT AN ATTRACTIVE PRICE. You can open your garage door easily and quickly with the hand transmitter or radio button. Of course, you do not have to do without comfort, for example the ventilation function and uniform lighting. And thanks to the ProMatic Akku, you can enjoy all the benefits of an automatic operator in garages without a power connection.





BiSecur

4-button hand transmitter HSE 4 BS, black textured surface with plastic caps as standard, full-scale

Garage door operators	ProMatic 4	ProMatic 4 Akku
Bluetooth receiver HET-BLE [1]	Optional	optional [2]
Hörmann homee	Compatible	Compatible
HCP bus connection	Integrated	Integrated
Cycles per day / hour	25 / 10	5 / 2
Pull and push force	650 N	500 N
Peak force	800 N	600 N
Max. opening speed	20 cm/s [4]	16 cm/s [4]
Lighting	10 LEDs	10 LEDs
Max. door width	5500 mm	4000 mm
Max. door surface	13.75 m²	9 m²

[1] For further information, see page 43
[2] With the ProMatic 4 Akku, connected accessories increase battery consumption and shorten the service life. In this case, we recommend the optional solar module.
[3] in comparison with ProMatic 3
[4] For sectional garage doors
[5] Optional Hörmann homee Brain required
[6] From year of manufacture 3/2025

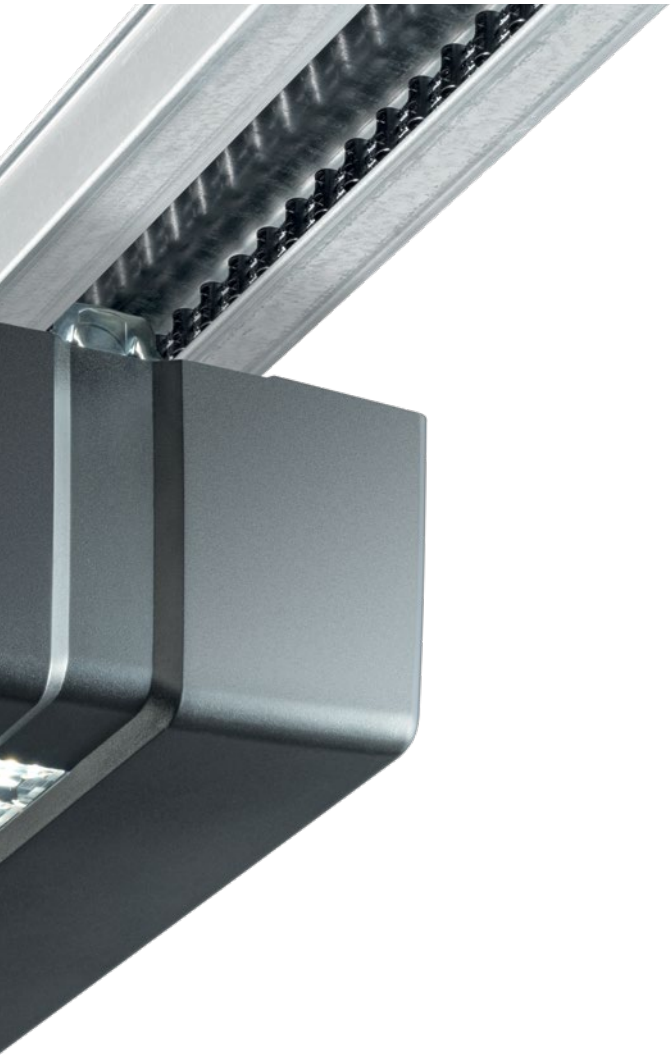

Special features

Quick door opening
An up to 40% faster opening speed [3] of up to 20 cm/s [4] means you can access your garage faster.

Simple query of the gate position
You can check that your garage door is open or closed at any time via the Hörmann homee app [5] or optionally with the HS°5°BS hand transmitter or the FIT 5 BS internal push button.

Convenient garage ventilation
Using the ventilation position, you can efficiently ventilate your garage without completely opening the door. Automatic ventilation is particularly convenient and reliable (see pages 46 – 47).

Switchable LED lighting
The operator light with 10 LEDs illuminates your garage well and up to 2 times [3] brighter.

Intelligent networking
Optional Smart Home system gateways can be easily connected via the HCP interface [2] (see page 37).

Low power consumption
In standby mode, the ProMatic 4 operator consumes 0.6 watts [6], thus protecting the environment and your bank balance.



ProMatic 4 Akku for garages without a power connection
If your garage does not have a power connection, the ProMatic 4 Akku is the perfect solution for you. Depending on the frequency of daily door cycles you can control your operator up to several weeks. Once the battery is empty, you can recharge it via a standard power outlet, for example over night. The optional solar module is particularly convenient as it charges the battery automatically (see page 44).

SupraMatic 4

Garage door operators

SUPRA-FAST DOOR OPENING AND SMART ADDITIONAL FUNCTIONS. Open your door supra-fast with the hand transmitter, allowing direct access from the street into your garage. Thanks to the standard Bluetooth receiver, you can also operate your door via the Hörmann BlueSecur app, meaning that you always carry your door opener with you on your smartphone. And the operator cover features an exclusive stainless steel design.

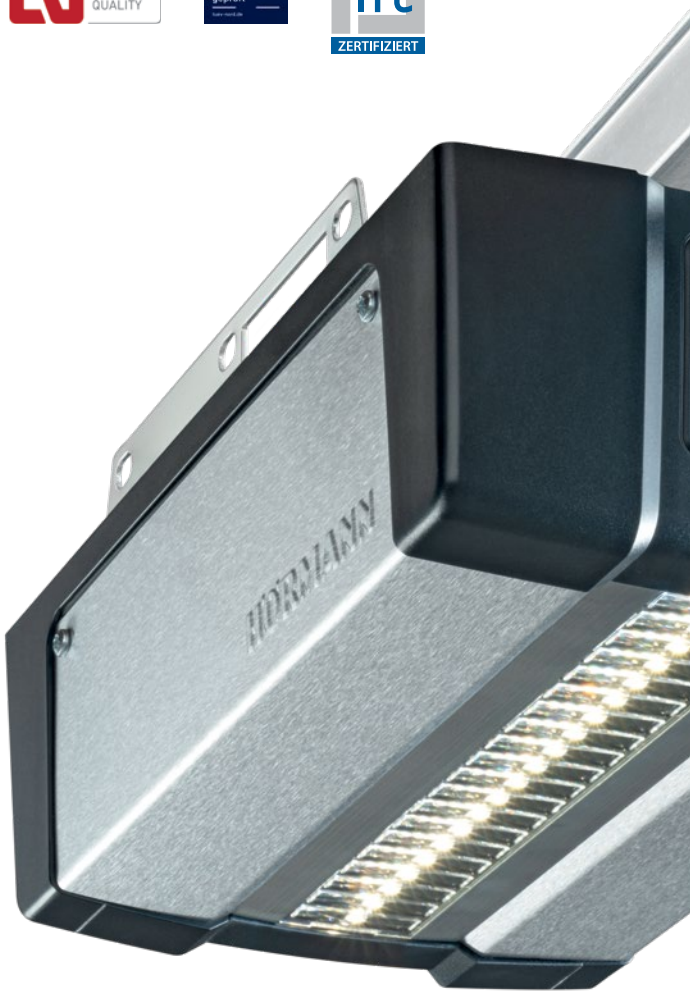



BiSecur

Standard 4-button hand transmitter HSE 4 BS, textured surface black with chrome caps, full-scale

Garage door operators	SupraMatic E4	SupraMatic P4
Bluetooth receiver	Integrated, can be switched on and off	Integrated, can be switched on and off
Hörmann homee	Compatible	Compatible
HCP bus connection	Integrated	Integrated
Cycles per day / hour	25 / 10	50 / 10
Pull and push force	650 N	750 N
Peak force	800 N	1000 N
Max. opening speed	25 cm/s [2]	28 cm/s [2]
Lighting	20 LEDs	30 LED chase light
Max. door width	5500 mm	6000 mm
Max. door surface	13.75 m²	15 m²

[1] in comparison with ProMatic 3
[2] For sectional garage doors
[3] Optional Hörmann homee Brain required
[4] From year of manufacture 3/2025



Only from Hörmann
European patent

Hörmann BlueSecur



Smart app operation
Using the standard Bluetooth receiver, you can control the operators on your smartphone with the Hörmann BlueSecur app (see pages 38 – 39).

Special features

Supra-fast door opening
An up to 100% faster opening speed [1] of up to 28 cm/s [2] means you can access your garage faster.

Simple query of the gate position
You can check that your garage door is open or closed at any time via the Hörmann BlueSecur app, the Hörmann homee app [3] or optionally with the HS°5°BS hand transmitter or the FIT 5 BS internal push button.

Convenient garage ventilation
Using the ventilation position, you can efficiently ventilate your garage without completely opening the door. Automatic ventilation is particularly convenient and reliable (see pages 46 – 47).

Switchable LED lighting
The operator light with 20 (SupraMatic E) or 30 LEDs (SupraMatic P) illuminates your garage very well and up to 3 or 5 times [1] brighter.

Easy-to-use programming
Connected accessories are automatically detected and the operator functions are set very easily by entering a two-digit number.

Intelligent networking
Optional Smart Home system gateways can be easily connected via the HCP interface (see page 37).

Low power consumption
In standby mode, the operators consume just 0.6 watts [4]. thus protecting the environment and your bank balance.

SupraMatic H4

Garage door operator

PREMIUM DRIVE WITH BRIGHT OPERATOR LIGHT. With a pulling and pushing force of up to 1000 N, the SupraMatic H4 premium operator opens even large garage doors quickly and reliably. The integrated LED lighting with a total of 60 LEDs provides very bright illumination of the garage, giving you peace of mind even in the dark.

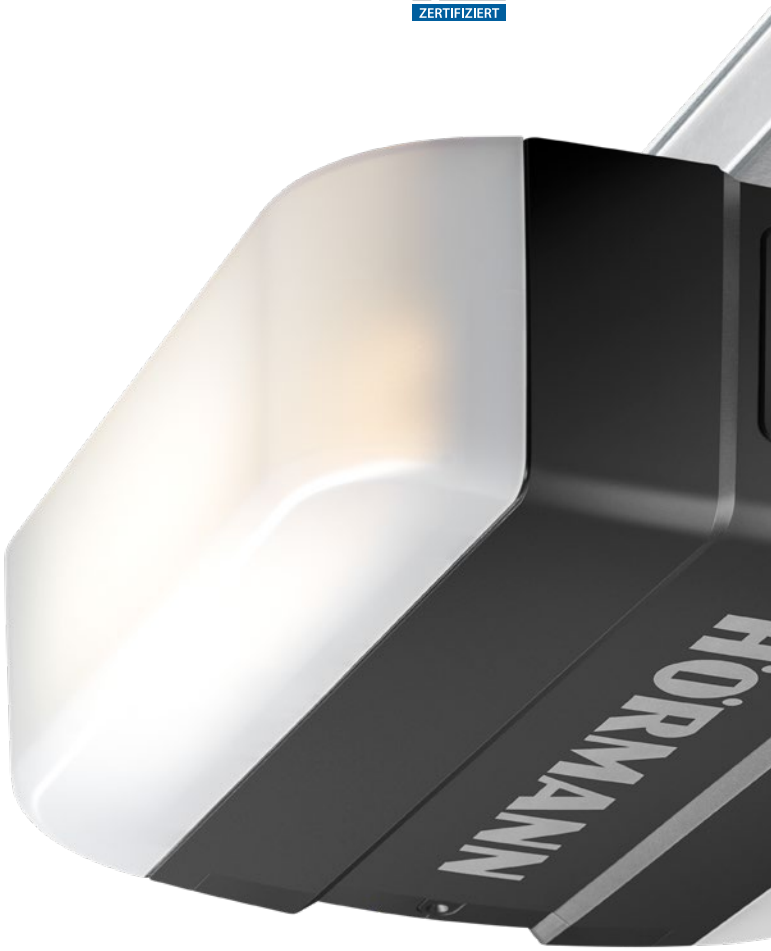



BiSecur

Standard 4-button hand transmitter HSE 4 BS, textured surface black with chrome caps, full-scale

Garage door operator	SupraMatic H4
Bluetooth receiver	Integrated, can be switched on and off
Hörmann homee	Compatible
HCP bus connection	Integrated
Cycles per day / hour	150 / 20
Pull and push force	1000 N
Peak force	1200 N
Max. opening speed	25 cm/s [2]
Lighting	60 LEDs
Max. door width	7000 mm
Max. door surface	18 m²

[1] in comparison with ProMatic 3
[2] For sectional garage doors
[3] Optional Hörmann homee Brain required



Only from Hörmann
European patent

Hörmann BlueSecur



Smart app operation
Using the standard Bluetooth receiver, you can control the operators on your smartphone with the Hörmann BlueSecur app (see pages 38 – 39).

Special features

Supra-fast door opening
An up to 75% faster opening speed [1] of up to 25 cm/s [2] means you can access your garage faster.

Large garage doors
Thanks to its maximum pull and push force of 1000 N and maximum 150 gate cycles per day, the operator is suitable for doors up to 7000 mm wide, even in commercial applications such as collective garages.

Simple query of the gate position
You can check that your garage door is open or closed at any time via the Hörmann BlueSecur app, the Hörmann homee app [3] or optionally with the HS°5°BS hand transmitter or the FIT 5 BS internal push button.

Convenient garage ventilation
Using the ventilation position, you can efficiently ventilate your garage without completely opening the door. Automatic ventilation is particularly convenient and reliable (see pages 46 – 47).

Switchable LED lighting
The operator light with 60 LEDs illuminates your garage excellently and up to 10 times [1] brighter.

Easy-to-use programming
Connected accessories are automatically detected and the operator functions are set very easily by entering a two-digit number.

Intelligent networking
Optional Smart Home system gateways can be easily connected via the HCP interface (see page 37).

Low power consumption
In standby mode, the operator only consumes 0.6 watts. thus protecting the environment and your bank balance.

Operator boom

Garage door operators

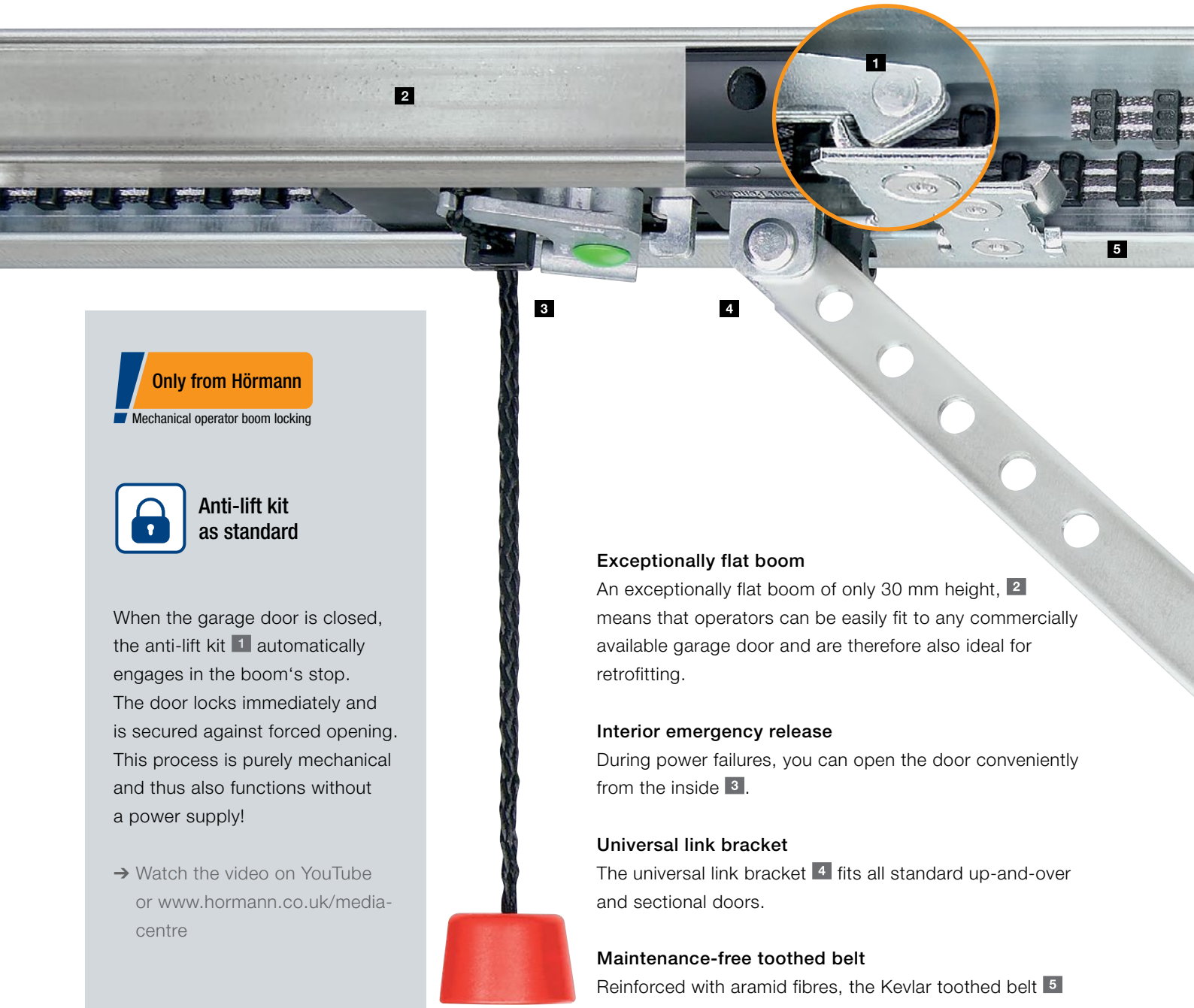

Only from Hörmann

Mechanical operator boom locking

Anti-lift kit as standard

When the garage door is closed, the anti-lift kit 1 automatically engages in the boom's stop. The door locks immediately and is secured against forced opening. This process is purely mechanical and thus also functions without a power supply!

➔ Watch the video on YouTube or www.hormann.co.uk/media-centre

Exceptionally flat boom

An exceptionally flat boom of only 30 mm height, 2 means that operators can be easily fit to any commercially available garage door and are therefore also ideal for retrofitting.

Interior emergency release

During power failures, you can open the door conveniently from the inside 3.

Universal link bracket

The universal link bracket 4 fits all standard up-and-over and sectional doors.

Maintenance-free toothed belt

Reinforced with aramid fibres, the Kevlar toothed belt 5 is particularly tear-resistant and quiet-running. It does not require grease or lubricants, providing an important advantage over chain or spindle operators.

Automatic belt tension

The strong spring mechanism 6 tensions the toothed belt automatically, thus ensuring uniform, smooth running.

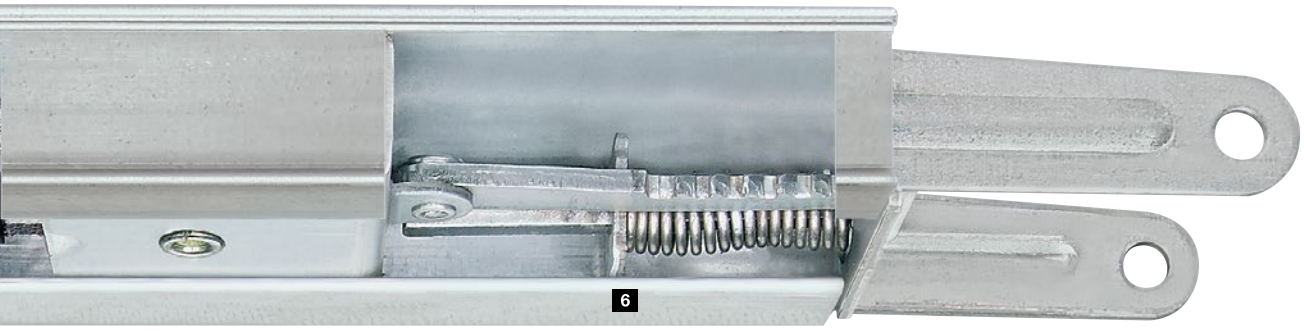

6

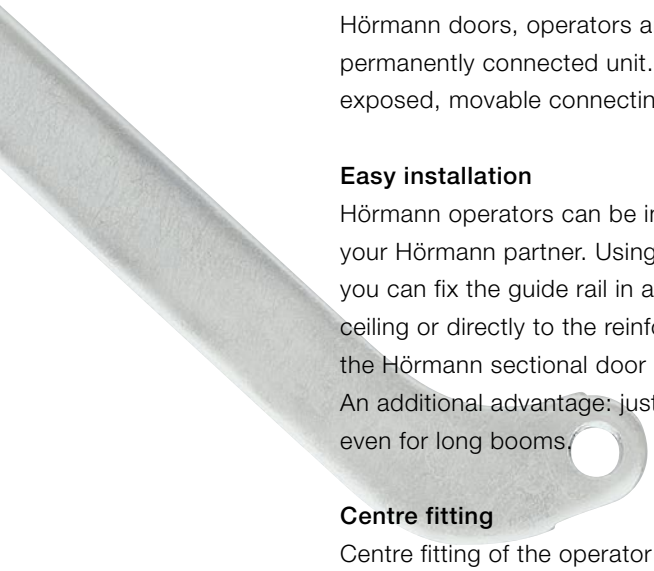

Compact unit
Hörmann doors, operators and booms form a compact, permanently connected unit. Additional control units and exposed, movable connecting cables are not necessary.

Easy installation
Hörmann operators can be installed easily and quickly by your Hörmann partner. Using the adjustable suspensions, you can fix the guide rail in a variety of ways: either to the ceiling or directly to the reinforced connection profile of the Hörmann sectional door (up to 3000 mm door width). An additional advantage: just one suspension is sufficient, even for long booms.

Centre fitting
Centre fitting of the operator boom on the door leaf results in uniform pull forces. No jamming or wear, which is frequently the case with e.g. operators installed on one side.



Easy fitting
For Hörmann sectional doors up to 3000 mm door width, the operator boom can simply be fitted on the connection profile of the door.



Special track application for hinged garage doors
Thanks to simple fitting of the optional track application, retrofitting is also very easy.

RotaMatic

Hinged gate operators

SLIM AND ELEGANT. Thanks to their modern, slim design, the RotaMatic hinged gate operators perfectly match your beautiful hinged gate. The functional and safety features are also exemplary. You can enjoy the convenience of an operator even if there is no direct connection to the mains supply. The RotaMatic Akku Solar makes it possible.





BiSecur

4-button hand transmitter HSE 4 BS, black textured surface with plastic caps as standard, full-scale

Hinged gate operators	RotaMatic	RotaMatic P	RotaMatic PL	RotaMatic Akku Solar
Bluetooth receiver HET-BLE [1]	Optional	Optional	Optional	Optional
Hörmann homee	Compatible	Compatible	Compatible	Compatible
HCP interface	Integrated	Integrated	Integrated	Integrated
Cycles per day / hour	20 / 5	40 / 10	40 / 10	5 / 2
Max. spindle speeds	Approx. 25 mm/s	Approx. 25 mm/s	Approx. 25 mm/s	Approx. 15 mm/s
Max. pull / push force	2200 N	2700 N	2700 N	1100 N
Min. – max. door leaf width	1000 – 2500 mm	1000 – 2500 mm	1500 – 4000 mm	1000 – 2500 mm
Max. door leaf height	2000 mm	2000 mm	2000 mm	2000 mm
Max. weight	220 kg	1000 kg [2]	1000 kg [2]	120 kg



Special features

Gentle gate leaf travel
The adjustable speed and the soft-start and soft-stop functions ensure a smooth gate travel and maximum convenience, even for larger gates.

Practical pedestrian passage
With double-leaf doors, it is possible to only open one door leaf fully or partially for pedestrian passage.

Simple query of the gate position
You can check that your entrance gate is open or closed at any time via the Hörmann homee app [3] or optionally with the HS°5°BS hand transmitter or the FIT 5 BS internal push button.

Intelligent networking
Optional Smart Home system gateways can be easily connected via the HCP interface (see page 37).

Low power consumption
In standby mode, the RotaMatic, RotaMatic P and RotaMatic PL operators only consume 0.8 watts. thus protecting the environment and your bank balance.

Opening inwards or outwards
Depending on the installation situation, the operator can open your gate inwards or outwards (see page 51).



RotaMatic Akku Solar for entrances without power connection
If there is no power outlet near your entrance gate, the powerful RotaMatic Akku Solar is the perfect solution for you. The powerful battery (approx. 30 days of use with an average of 5 gate cycles per day and an ambient temperature of +20 °C) is safely housed in a separate housing. It is charged using the standard solar module.

[1] For further information, see page 43
[2] Dependent on door size and door infill
[3] Optional Hörmann homee Brain required

VersaMatic

Hinged gate operators

FLEXIBLE FOR SPECIAL FITTING SITUATIONS. The VersaMatic hinged gate operators are the perfect solution even for unusual fitting situations. They are suitable for fitting to very low door pillars, for example. In addition, the fitting position is variable and can be optimally adjusted to suit any situation. Furthermore, no separate controls have to be installed – this saves time and space.





BiSecur

4-button hand transmitter HSE 4 BS, black textured surface with plastic caps as standard, full-scale

Hinged gate operators	VersaMatic	VersaMatic P	VersaMatic Akku Solar
Bluetooth receiver HET-BLE [1]	Optional	Optional	Optional
Hörmann homee	Compatible	Compatible	Compatible
HCP interface	Integrated	Integrated	Integrated
Cycles per day / hour	20 / 5	40 / 10	5 / 2
Maximum torque	250 Nm	300 Nm	200 Nm
Max. idling speeds	Approx. 2.6 rpm	Approx. 2.7 rpm	Approx. 1.7 rpm
Min. – max. door leaf width	1000 – 2000 mm	1000 – 3000 mm	1000 – 2000 mm
Max. door leaf height	2000 mm	2000 mm	2000 mm
Max. weight	200 kg	900 kg [2]	150 kg

[1] For further information, see page 43
[2] Dependent on door size and door infill
[3] Optional Hörmann homee Brain required

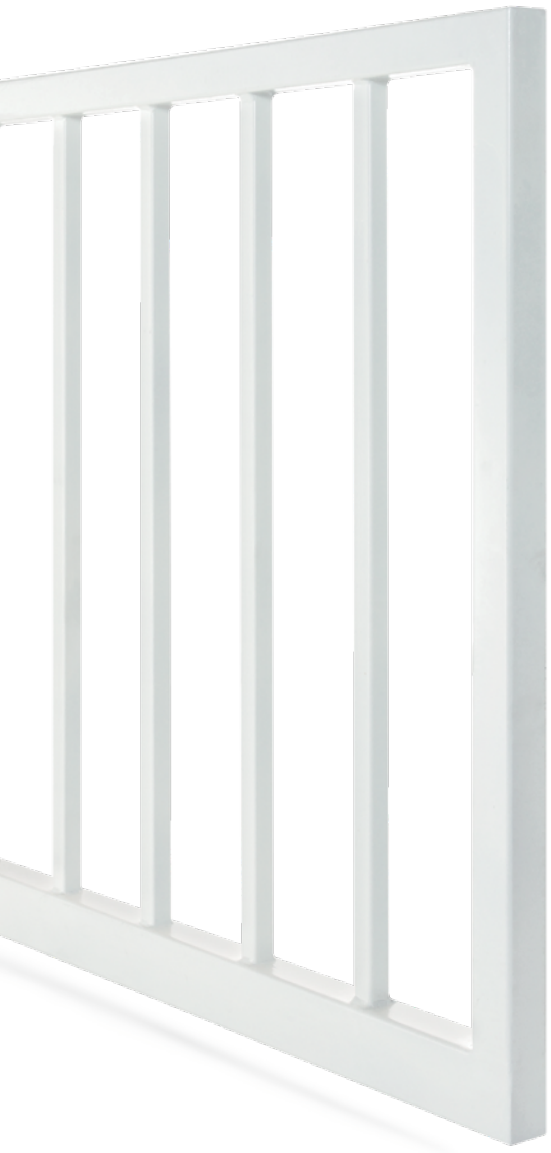

Special features

Gentle gate leaf travel
The adjustable speed and the soft-start and soft-stop functions ensure a smooth gate travel and maximum convenience, even for larger gates.

Practical pedestrian passage
With double-leaf doors, it is possible to only open one door leaf fully or partially for pedestrian passage.

Simple query of the gate position
You can check that your entrance gate is open or closed at any time via the Hörmann homee app [3] or optionally with the HS 5 BS hand transmitter or the FIT 5 BS internal push button.

Intelligent networking
Optional Smart Home system gateways can be easily connected via the HCP interface (see page 37).

Low power consumption
In standby mode, the VersaMatic and VersaMatic P operators only consume 0.8 watts. thus protecting the environment and your bank balance.

Opening inwards or outwards
Depending on the installation situation, the operator can open your gate inwards or outwards (see page 53).



VersaMatic Akku Solar for entrances without power connection
The power supply possibilities are just as versatile as the fitting. If you don‘t have a power connection near your door, you can use the standalone VersaMatic Akku Solar. The powerful battery (approx. 30 days of use with an average of 5 gate cycles per day and an ambient temperature of +20 °C) is safely housed in a separate housing. It is charged using the standard solar module.

LineaMatic

Sliding gate operators

COMPACT AND RELIABLE. Highlights of the LineaMatic sliding gate operators include its compact, height-adjustable housing made of zinc die-cast and glass-fibre reinforced plastic, as well as its reliable operator electronics.





BiSecur

4-button hand transmitter HSE 4 BS, black textured surface with plastic caps as standard, full-scale

Sliding gate operators	LineaMatic	LineaMatic P	LineaMatic H (no radio)	LineaMatic Akku Solar
Bluetooth receiver HET-BLE [1]	Optional	Optional	Optional	Optional
Hörmann homee	Compatible	Compatible	Compatible [2]	Compatible
HCP interface	Integrated	Integrated	Integrated	Integrated
Cycles per day / hour	20 / 5	40 / 10	40 / 10	5 / 2
Max. door travel speeds	Approx. 22 cm/s	Approx. 20 cm/s	Approx. 15 cm/s	Approx. 15 cm/s
Max. pull / push force	800 N	1200 N	1400 N	800 N
Min. – max. door leaf width	800 – 6000 mm	800 – 8000 mm	800 – 10000 mm	800 – 6000 mm
Max. door leaf height	2000 mm	2000 mm	3000 mm	2000 mm
Max. weight	300 kg	500 kg	800 kg	200 kg
Max. self-supporting weight	250 kg	400 kg	600 kg	150 kg



Special features

Gentle gate leaf travel
The adjustable speed and the soft-start and soft-stop functions ensure a smooth gate travel and maximum convenience, even for larger gates.

Practical pedestrian passage
The gate leaf can be partially opened for pedestrian passage.

Simple query of the door position [2)]
You can check that your entrance gate is open or closed at any time via the Hörmann homee app [3)] or optionally with the HS 5 BS hand transmitter or the FIT 5 BS internal push button.

Intelligent networking
Optional Smart Home system gateways can be easily connected via the HCP interface (see page 37).

Low power consumption
In standby mode, the LineaMatic, LineaMatic P and LineaMatic H operators only consume 0.8 watts, thus protecting the environment and your bank balance.

[1)] For further information, see page 43
[2)] LineaMatic H only in conjunction with the optional BiSecur radio receiver ESE
[3)] Optional Hörmann homee Brain required



LineaMatic Akku Solar for entrances without power connection
The Akku Solar variant is recommended if your entrance gate does not feature a power connection. The powerful battery (approx. 30 days of use with an average of 5 gate cycles per day and an ambient temperature of +20 °C) is safely housed in a separate housing. It is charged using the standard solar module.

STA 500 FU

Sliding gate operator

ROBUST FOR HEAVY GATES. The sliding gate operator STA 500 FU is specifically designed for large gates. The control 560 ensures precise gate travel and gentle gate operation through soft start and soft stop of the gate.



Sliding gate operator	STA 500 FU
Bluetooth receiver	Optional (HET-BLE)
Cycles per day / hour	100 / 10
Max. pull / push force	1750 N*
Min. – max. door leaf width	1000 – 17000 mm
Max. door leaf height	3000 mm
Max. weight	2500 kg
Max. self-supporting weight	1800 kg

* Brief peak force 2500 N

Hörmann BlueControl



Control 560 with smart set-up and adjustment via the BlueControl App.


1


2


3


4

Sound-absorbing seal

A sound-absorbing seal reduces the forces that arise during a collision with vehicles or people and thus also reduces damage or injuries. It is sold separately for hinged gates 1 or sliding gates 2. The operating forces for the operators RotaMatic, VersaMatic and LineaMatic with a sound-absorbing seal have been tested and certified for many gate sizes and fitting situations by a recognised test institute.

3 Electric lock

Hinged gates are subjected to enormous forces under high wind loads. An additional electric lock secures them from being blown open.

4 Warning light

A warning light during door travel provides you with extra security, day and night.

Smart Home

Overview

AS INDIVIDUAL AS YOU. Be it BiSecur Funk, Bluetooth or external Smart Home control centre – choose your personal favourite to conveniently control your operators, locks or other devices. In the overview you can see which technology suits your requirements.

1 Garage door operators

2 Entrance gate operators

3 Entrance door locks

4 Door operators

5 Receivers, sockets, switches

6 Lighting

7 Roller shutters and blinds*

8 Security cameras*

9 Smoke and movement detector*

10 Door and window contacts as well as alarm systems*

11 Radiator thermostats*

12 Weather stations*

* depending on the Smart Home system

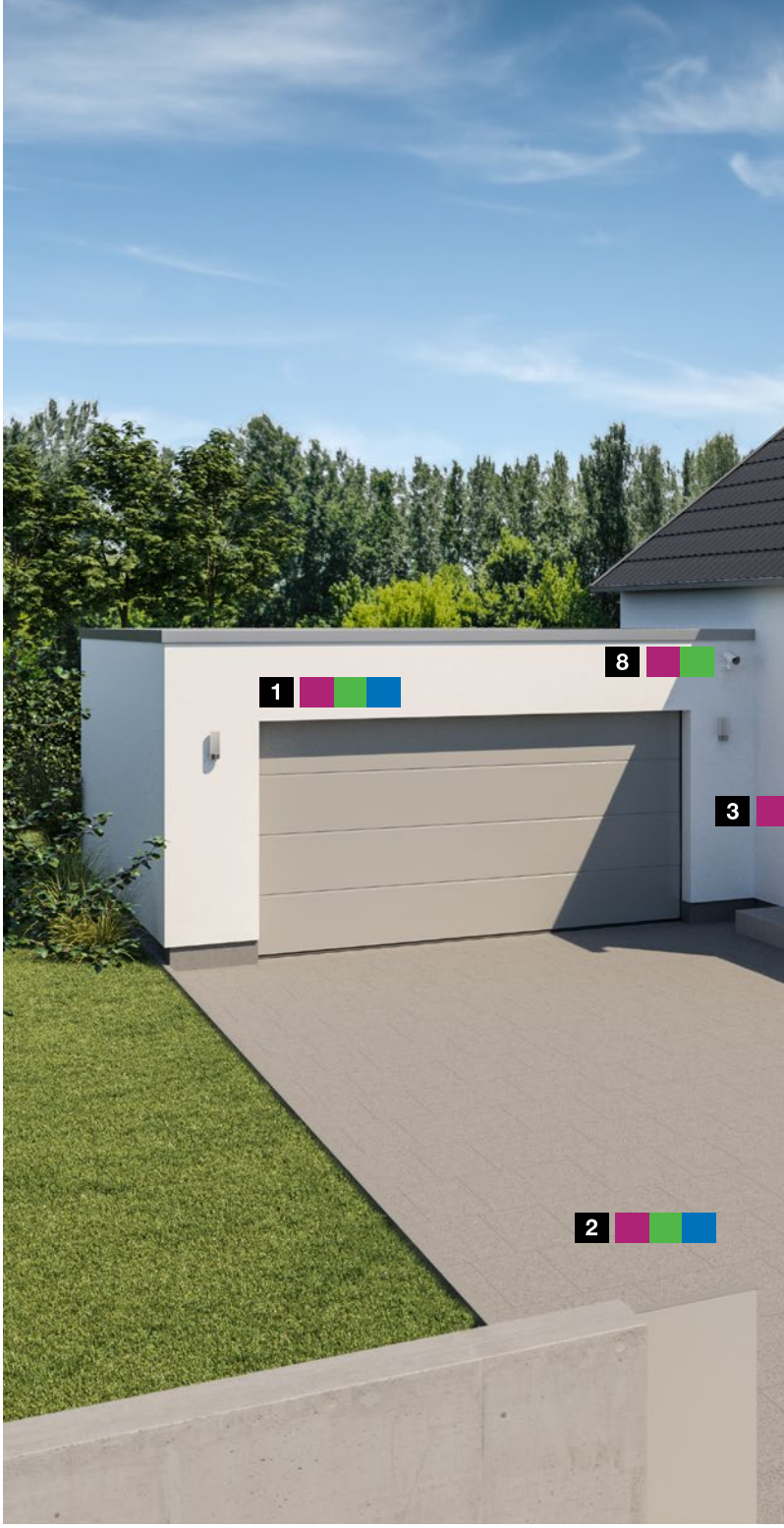

HÖRMANN HOMEE. From your couch, in the office or on holiday. If required, you have full control over your gates, doors and other connected devices at all times. At any time of day or night, from anywhere around the world **– by simply using your smartphone, tablet or PC.** The **Hörmann homee Brain Smart Home control centre** can also be extended with additional radio technology to meet your precise needs.

➔ Further information can be found starting on page 34.

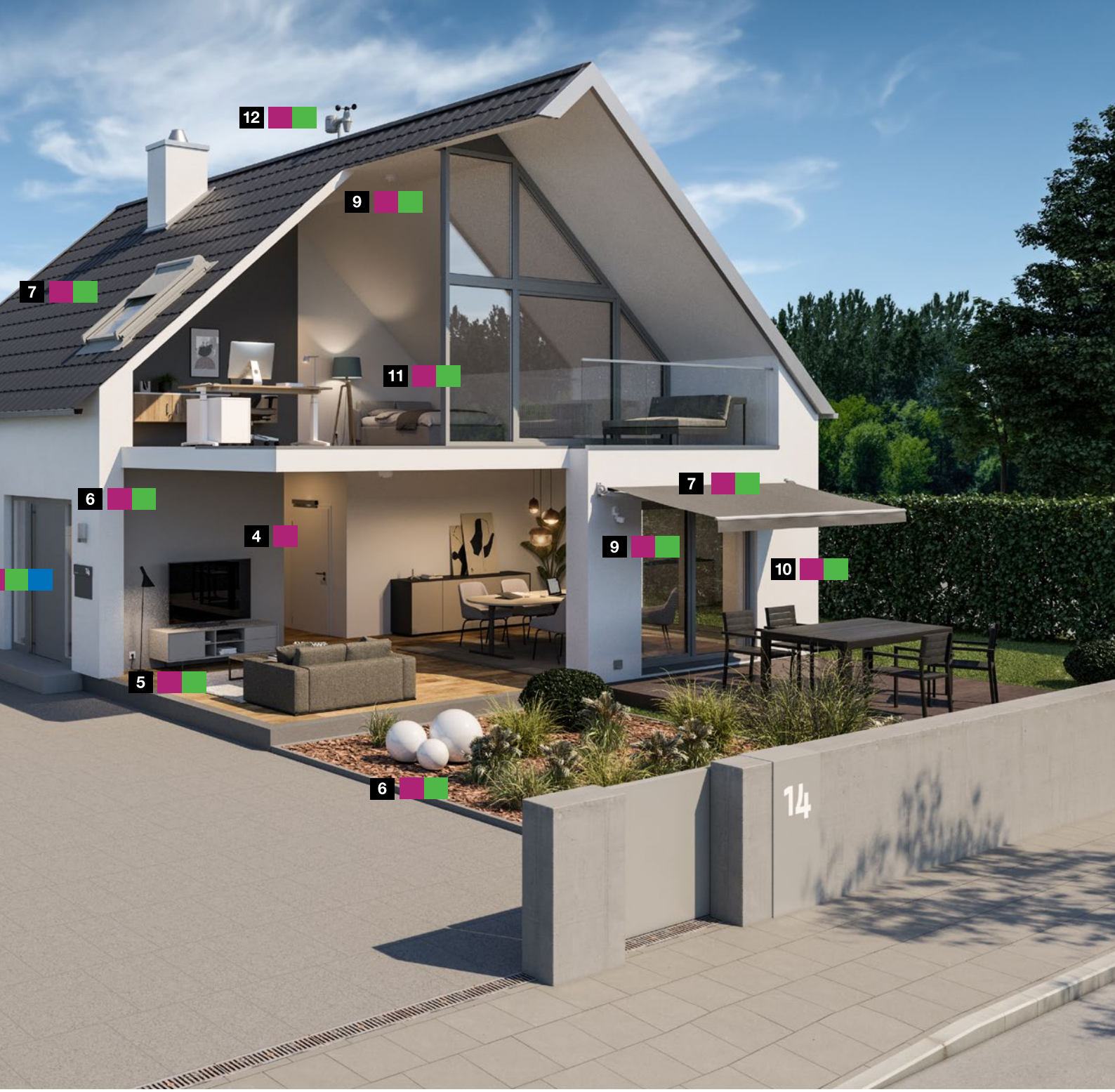

EXTERNAL SMART HOME SYSTEMS. Via the **HCP bus,** you can network your garage door and entrance gate operators with external Smart Home systems using optional modules. Benefit from the numerous operating, energy and safety functions of Homematic, DeltaDore, KNX, Loxone, Google Home, Amazon Alexa and Apple Home.

➔ Further information can be found from page 37 onwards.

HÖRMANN BLUESECUR APP. Operate **all your doors and gates** equipped with a Bluetooth receiver **conveniently via your smartphone.** Using individual user keys, you can transfer authorisations very simply to other smartphones, so that every family member always has their door opener with them.

➔ Further information can be found starting on page 38.

Smart Home

Hörmann homee

CONVENIENT OPERATION

Free app for smartphones and tablets

Web app for PC

Voice control via Amazon Alexa, Google Assistant, Apple Siri

USEFUL FUNCTIONS

Automation with Homeegramms

Time / calendar function

Simple operation by grouping devices

Automatic presence detection by geofencing

Weather forecast

Door position display

EASY INSTALLATION

The Hörmann homee Brain Smart Home control centre is simply integrated into your home network via a WiFi connection* to your router.

* Optional LAN adapter available

➔ You can find further information at www.hoermann.de/smart-home



VERSATILE RADIO CONTROL

Hörmann BiSecur radio system as standard
For an exact list of compatible Hörmann products, please refer to the compatibility overview at www.hormann.co.uk/media-centre

WiFi radio system as standard
Compatible with Smart Home control centres: AVM Smart Home, Netatmo, Belkin, Nuki, Homematic, myStrom, WOLF Haustechnik

Garage door operators

Entrance gate operators

Feeling sure and secure (e.g. alarm systems and cameras, smoke and movement detectors, window and door contacts, roller shutters and blinds)

Door operators

Entrance door locks

Convenience (e.g. lighting, radio receivers, switches)

Radio sockets

Energy-saving (e.g. heating thermostats, weather stations, rain sensors)





1

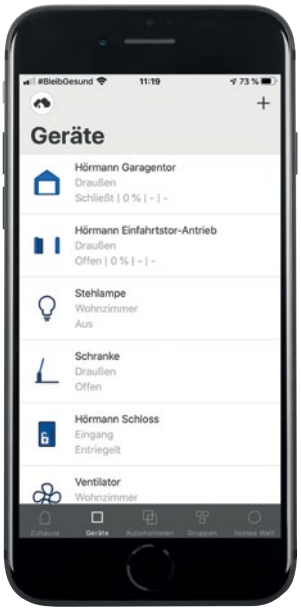

2

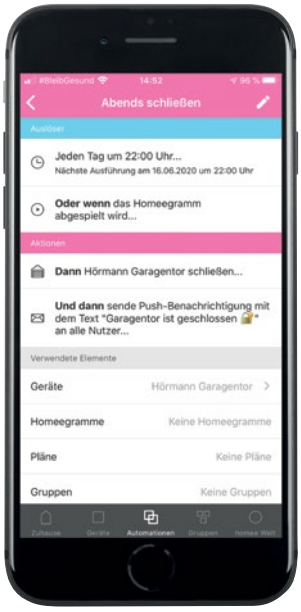

3



4

Clear, simple, individual

1 Convenient operation
All functions that you control with your hand transmitters can also be executed with the app. The intuitive menu navigation and a clearly organised navigation structure make operation a breeze.

2 Simple overview
With the app, you have an exact overview of the status of your garage door and entrance gate, your entrance door lock and all other connected devices at all times. Self-explanatory icons show you whether your doors are open or closed or whether your entrance door lock is locked or unlocked.

3 Setting up Homeegramms
Simply combine several individual functions to make convenient Homeegramms. A scenario means that, at the press of a button, you can open or close your garage door and entrance gate at the same time, or control your entrance door together with your external lighting. You create the Homeegramms individually for your personal app usage – exactly the way you want them to be.

4 Worldwide networking
You can have full control over your networked devices at all times and can choose to be informed by push message* if, for example, the entrance door lock is unlocked via the app or the movement detector detects a person.

* In conjunction with a corresponding Homeegramm

Smart Home

Hörmann homee

EXPAND YOUR POSSIBILITIES. The Hörmann homee Brain Smart Home control centre with BiSecur and WiFi radio as standard can be expanded at any time with new cubes, and therefore with additional radio systems. Each cube is responsible for another radio technology and can communicate with other devices.

➔ Watch the video on YouTube or www.hormann.co.uk/media-centre

ZigBee radio system
The Zigbee cube can primarily be used to connect smart devices from the lighting sector, such as Philips Hue or IKEA TRÅDFRI.

EnOcean radio system
The radio system is known for its battery-free devices such as from AFRISO, Eltako or Hoppe.

Z-Wave radio system
From Abus, Eurotronic and Fibaro to Zipato, you can simply connect them all with this cube.

WiFi radio system
The basis for your intelligent home connects many devices from Netatmo Homematic, AVM FRITZ or Nuki. It is integrated in the Hörmann homee Brain as standard and can be operated by smartphone app and voice control (Alexa, Google Assistant, Apple Siri).

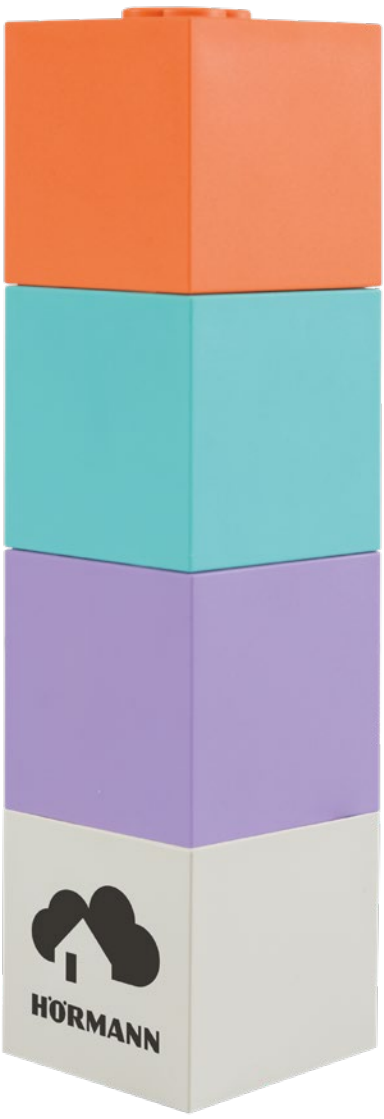

FEELING SURE AND SECURE
e.g. alarm systems and cameras, smoke and movement detectors, window and door contacts, roller shutters and blinds

CONVENIENCE
e.g. lighting, radio sockets, switches

ENERGY-SAVING
e.g. heating thermostats, weather stations, rain sensors

homematic IP

IP gateway with radio connection to the Smart Home system



DELTA DORE

Gateway with radio connection to the Smart Home system





HAP 1 HCP adapter
For connection of gateways on the HCP bus to SupraMatic 4 and ProMatic 4 operators

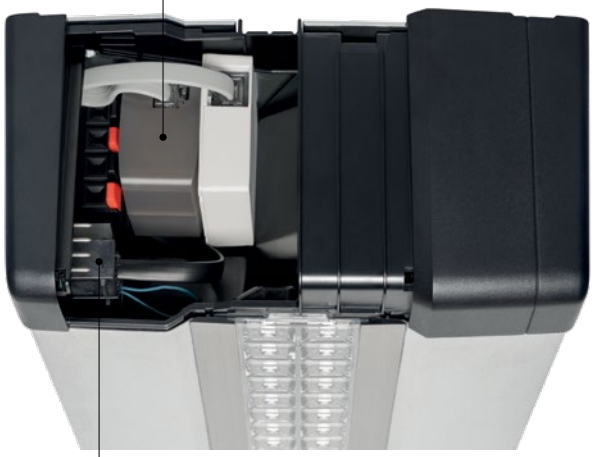

works with Google Home | Works with Apple Home | works with alexa

IT WLAN gateway
Integrated internal push button, (impulse, light, ventilation position) and gateway for voice operation and control of Hörmann garage door operators via Apple Home, Amazon Alexa*, Google Home / Google Assistant*, for indoor use only



WiFi gateway
Gateway for voice operation and control of Hörmann door operators via Apple Home, Amazon Alexa*, Google Home / Google Assistant*, for indoor and outdoor use (protection category: IPX4)



Google Home is a trademark of Google LLC.
WLAN gateway features Apple HomeKit technology for home management.
Amazon, Alexa and all related logos are trademarks of Amazon.com, Inc. or its affiliates.

KNX

Gateway for control via the KNX building automation (HAP°1°HCP adapter not required)



LOXONE

Gateway for control via the KNX building automation (HAP 1 HCP adapter not required)



* Amazon Skill / Google Action “Hörmann Tor” required

Smart Home

Hörmann BlueSecur App

GARAGE DOOR OPERATORS [1]

- Open door
- Close door
- Half open
- Impulse OPEN / CLOSE
- Ventilation opening
- Operator light
- Door position display



ENTRANCE GATE OPERATORS [1]

- Open door [2]
- Close door [2]
- Impulse OPEN / CLOSE
- Pedestrian passage
- Door position display

DOOR LOCKS [1]

- Temporary lock release
- Permanent lock release

RECEIVER [1]

- Switch on
- Switch off

[1] Functions dependent on the respective operator, lock or receiver
[2] with optional universal adapter print UAP

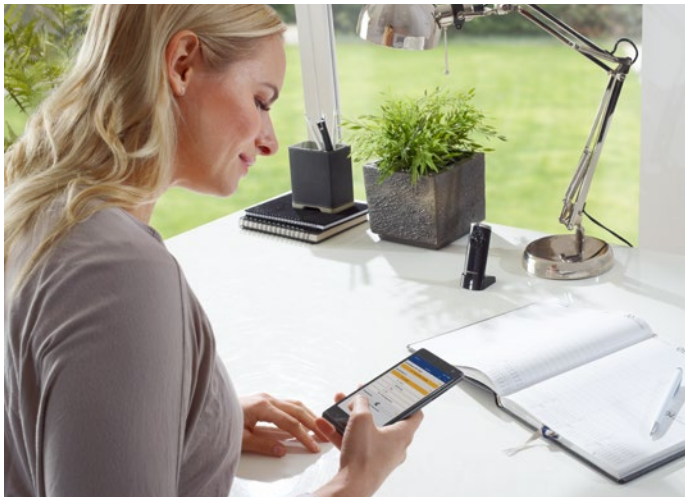



1

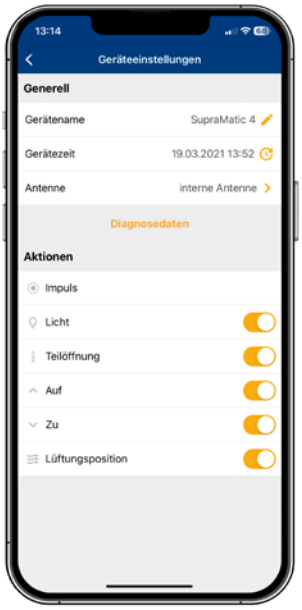

2



3

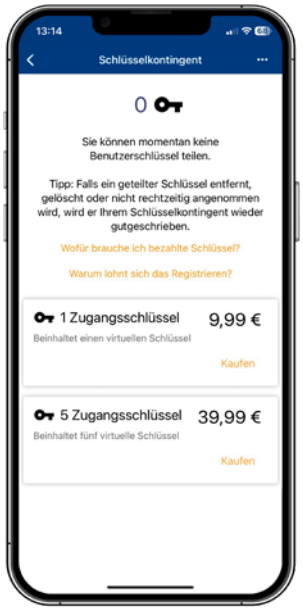

4

Only from Hörmann

European patent

Hörmann BlueSecur

Easy installation

- Download the Hörmann BlueSecur app
- Scan the QR code for the operator or external receiver
- Automatic transmission of control functions to the smartphone
- Individual setting of the desired functions by the user 1

Convenient operation

- Via smartphone or smartwatch and in the vehicle via Apple CarPlay or Android Auto (no hand transmitter or control element required)
- Custom receiver and device names as well as control function names 2
- Individual selection of control functions per receiver / operator

Individual user administration

- One free user key included (with automatic admin function) 3
- Additional permanent user keys for transfer to additional smartphones available in the AppStore or at Google Play 4

Accessories

Hand transmitter

BiSecur



HS 5 BS
4 button functions plus query button, high-gloss surface black or white

HS 5 BS
4 button functions, plus query button, textured surface matt black



HS 4 BS
4 button functions, textured surface matt black



HS 1 BS
1 button function, textured surface matt black



HSE 1 BS
1 button function, including eyelet for key ring, textured surface matt black



HSE 4 BS
4 button functions, incl. eyelet for key ring, textured surface matt black with chrome or plastic caps



HSE 4 BS
4 button functions, incl. eyelet for key ring
High-gloss finish with chrome caps,
Colours (pictured from left): White, anthracite grey, Frozen Grey, **NEW.** Rose gold, Carbon, Silver



HSD 2-C BS
High-gloss chrome, 2 button functions, can also be used as a key ring



HSZ 1 BS / HSZ 2 BS
1 or 2 button functions, for insertion in vehicle cigarette lighter



HSI 3 BS
To control up to 3 doors, with extra-large buttons, impact-resistant housing, protection category: IP 65



HSI 6 BS
To control up to 6 doors, with extra-large buttons, impact-resistant housing, protection category: IP 65

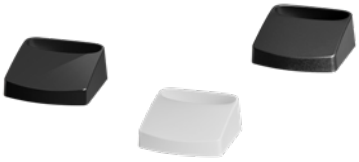

Hand transmitter station
In high-gloss surface black or white, textured surface matt black, for HS 5 BS, HS 4 BS, HS 1 BS



Hand transmitter holder
For wall fitting or fastening to the sun visor of a car, transparent, for HS 5 BS, HS 4 BS, HS 1 BS as well as HSE 1 BS and HSE 4 BS



Radio code switch
FCT 3 BS
3 functions, with illuminated buttons, surface-mounted or recessed fitting possible, plastic housing in Light grey RAL 7040



Radio code switch
FCT 10 BS
10 functions, with illuminated buttons and hinged cover, recessed or surface-mounted fitting possible, plastic housing painted in RAL 9006
White aluminium



Radio finger-scan
FFL 25 BS
2 functions and up to 25 fingerprints, with hinged cover, recessed and surface-mounted fitting possible, plastic housing painted in RAL 9006
White aluminium



Radio internal push button
FIT 1 BS
1 button function with large button for simple operation, plastic housing in Pure white RAL 9010



Radio internal push button
FIT 4 BS
4 button functions, plastic housing in Pure white RAL 9010



Radio internal push button
FIT 5 BS
4 button functions plus query button, plastic housing in Pure white RAL 9010



Radio internal push button
FIT 2-1 BS
2 functions, connection option for max. 2 control elements via cable, e.g. key switch, plastic housing in Pure white RAL 9010



Recessed radio transmitter 2 functions, for recessed buttons, central installation in the house within sight of the garage door

HSU 2 BS: for switch boxes with Ø 55 mm with connection to the house mains supply
FUS 2 BS: for switch boxes with Ø 55 mm, including 1.5 V battery



Radio radar button FSR 1 BS
1 function for non-contact opening or closing of the garage door, supply voltage 230 V
Radar button HTR 1-230
1 function, relay output for connecting to a switch cable, operating voltage: 230 V
Radar button HTR 1-24
Same function as HTR 1-230, operating voltage 24 V

Accessories

Exterior button



Transponder key switch
TTR 1000-1
1 function, 1000 teachable keys, scope of delivery: 1 key and 1 card (more on request), zinc die-cast housing in White aluminium RAL 9006



Code switch
CTP 3-1
3 functions, with illuminated lettering and touch-sensitive black surface, zinc die-cast housing in White aluminium RAL 9006



Code switch CTR 1b-1 / 3b-1
1 or 3 functions, plastic housing in Light grey RAL 7040



Decoder unit
included in the scope of delivery for the TTR 1000-1, CTP 3-1, CTR 1b-1 / 3b-1
Fitting inside the garage with a cable connection to the button



Code switch
CTV 3-1
3 functions, particularly robust with metal keypad, zinc die-cast housing in White aluminium RAL 9006 with stainless steel panel



Finger-scan
FL 150
2 functions, control via fingerprint, up to 150 savable fingerprints, zinc die-cast housing in White aluminium RAL 9006 with stainless steel panel



Key switch STUP 50 / STAP 50
Recessed version and surface-mounted version, incl. 3 keys, zinc die-cast housing in White aluminium RAL 9006 with stainless steel panel
(Shown from left)



Key switch ESU 40 / ESA 40
Recessed version and surface-mounted version, incl. 3 keys, zinc die-cast housing in Light grey RAL 7040 with stainless steel panel
(Shown from left)

Internal push button



Internal push button
IT 1b-1
Large, illuminated button for convenient opening of the door, plastic housing in Pure white RAL 9010



Internal push button
IT 3b-1
Large button with illuminated ring for opening or closing the door, buttons for the operator light and to switch off the radio control (e.g. while on holiday), plastic housing in Pure white RAL 9010



Internal push button IT 3b-1 Motion
Large button with illuminated ring for opening or closing the door, integrated movement detector for automatically switching on the operator light when entering the garage (can be switched on and off) and buttons to switch off the radio control (e.g. while on holiday), plastic housing in Pure white RAL 9010

Radio receiver, adapter print, option relay



Radio socket FES 1-1 BS
For switching lights as well as other devices on and off, up to 2000 W, as well as for controlling (impulse) operators of other makes, plastic housing in RAL 9010 Pure white, Hörmann homee compatible



Bluetooth receiver HET-BLE
For operation, impulse control of garage door and entrance gate operators (series 1 – 3 and operators of other makes), electric strikes for entrance doors and internal door operators via the Hörmann BlueSecur app



Radio receiver HEU 2 BS
For operation of 2 consumers, for recessed sockets with Ø 55 mm with connection to the house mains supply, Hörmann homee compatible



Radio receiver HER 1
1, 2 or 4 channels to operate an additional external light or a garage door (of other make) using Hörmann radio accessories, Hörmann homee compatible



Radio receiver ESE
External radio receiver to increase the radio range



Option relay HOR
For control of a garage light or warning light



Universal adapter print UAP
For functional extension, e.g. direction selection (Open / Stop / Close), control of operator light and partial opening function

Photocells



One-way photocell EL 201
As additional safety equipment for all garage door operators, connection via cable (on the operator)



One-way photocell EL 301
As additional safety equipment for all garage door and entrance gate operators, connection via cable (on the operator), max. door width 6 – 8 m



One-way photocell EL 71-B
As additional safety equipment for entrance gate operators RotaMatic, VersaMatic and LineaMatic, power supply via battery or cable, max. gate width 20 m (or 10 m with battery operation)

Accessories

Emergency power supply battery, solar module, protective cover



Emergency battery HNA for garage door operators
With this emergency power, you can bypass network power failures for up to 18 hours and max. 5 door cycles. The emergency battery recharges itself during normal operation. Emergency batteries can be added to all current Hörmann garage door operators.



Emergency battery HNA Outdoor for entrance gate operators
The RotaMatic and VersaMatic hinged gate operators, and LineaMatic sliding gate operator can also be equipped with an emergency power supply to bridge power failures. They can be universally fitted to the wall or floor.



Solar module for garage door operator ProMatic 4 Akku
Approx. 30 days operation period (based on an average of 5 door cycles per day and an ambient temperature of +20 °C); weight 8.8 kg; dimensions 330 × 220 × 115 mm



Dripping water protective cover for garage door operators SupraMatic and ProMatic
To protect the operator from the ingress of dripping water, e.g. for fitting under a carport; protection category of the operator in combination with the dripping water protective cover: IP X1

Alarm, additional locking, emergency release



Alarm sensor HAS 1
For securing garage doors in the ventilation position or partial opening position, immediately signals an alarm if the door is manually pushed open or lifted without a travel command, fitting on the guide rail



Locking element ETV-1HCP
Additional electromagnetic door locking, for locking the closed door or in the ventilation position*

* Only for garage door operator SupraMatic H4



Emergency release for up-and-over doors and sectional doors with handle
For up-and-over and sectional doors with a handle, you can use a door handle to operate the emergency release. The door is then unlocked via a Bowden cable on the inside. The emergency release handle including lock can be integrated in the master key system (Figure shows door handle for sectional garage door).



Emergency release for sectional doors without handle
The emergency release lock with an inconspicuous round cylinder (cannot be integrated in the master key system) releases your garage door and you can easily open it in case of an emergency.



LED-Stripes for sectional garage doors
Neutral white light, flexible fitting on the tracks of the door using a magnetic strip, controlled via an optional relay by the garage door operator, via an optional radio relay receiver using a hand transmitter or an on-site switch, lengths: 2 × 2 m + 1 × 2 m

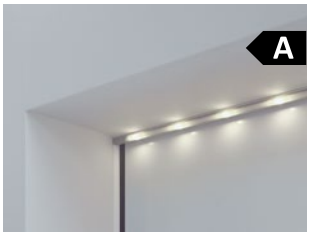

LED light strip for doors
Neutral white light, plug-in system can be individually shortened, fitting to lintel (fig.) or door leaf bottom edge



LED light modules
Warm or natural white light, optional aluminium design panel
(Shown from left)



Light key switch post SLS-K
With LED light module, height 550 mm
SLS-L
With LED light module and design screen, height 1080 mm
(Shown from left)



Safety key switch post STL
Basic version with support box for a photocell with a height of 550 mm
Version for two optional photocells
Version for an optional photocell and LED light module
(Shown from left)

Accessories

Automatic garage ventilation

Optimum ventilation of the garage can effectively prevent mould

Regular ventilation is particularly important in garages without windows. The climatic sensor automatically regulates the correct ventilation. It automatically opens the door if humidity in your garage is too high. The door is automatically closed once humidity in the garage has been regulated again. In the ventilation position, the optional alarm sensor HAS1 monitors the door and immediately triggers an alarm if the door is manually lifted or pushed open by unauthorised persons (see page 44). You can leave your home with peace of mind when your garage is automatically ventilated.





1



2


3

1 Internal climate sensor HKSI [1] for automatic garage ventilation

- For monitoring humidity and automatic ventilation of the garage
- If humidity is too high, the door is automatically opened and then automatically closed again once humidity is adjusted
- Automatic opening and closing of the door via the “ventilation position” operator function without the need to install an additional safety photocell
- Adjustable temperature range for which the door does not open (e.g. if there is a risk of frost in the garage)
- Adjustable operating hours (e.g. overnight shut-off) and opening times (e.g. max. 2 hours per ventilation)
- Can be extended with the external sensor HKSA 2, which measures outside air humidity and prevents the door from being opened at higher levels, and with an on-site ventilation fan for quick and effective ventilation

3 Ventilation slot on the topmost section for sectional garage doors

- Ventilation slot via optional folding roller bracket on the topmost section
- The bottom door section remains sealed on the ground, thus offering protection against small animals or leaves
- Automatic opening and closing via the “ventilation position” operator function of the HKSI climatic sensor or via Smart Home systems connected to the HCP bus of the operator
- Manual opening and closing by hand transmitter or button
- Optionally available for all sectional garage doors LPU 67 Thermo*, LPU 42 [2] with operator
- All sectional garage doors LPU 42 [2] can be retrofitted with operator SupraMatic or ProMatic (from year of manufacture 2012)

[1] For the operators SupraMatic 4 (from 10.2019), SupraMatic 3 (from 07.2013, Index C), ProMatic 4 (from 10.2019) and WA 300 S4 (from 01.2014, Index D)
[2] Only track application N, L, Z, not for doors with wicket door

Technical data

Garage door operators SupraMatic, ProMatic

		BiSecur SupraMatic H4	BiSecur SupraMatic 4 E	BiSecur SupraMatic 4 P	BiSecur ProMatic 4	BiSecur ProMatic 4 Akku
Door cycles (OPEN / CLOSE)	Per day / hour	150 / 20	25 / 10	50 / 10	25 / 10	5 / 2
Suitable for:	Doors with wicket doors / timber doors	● / ●	● / ●	● / ●	● / ●	● / ●
	Max. door width	7000 mm	5500 mm	6000 mm	5500 mm	4000 mm
	Max. door leaf surface	18 m²	13.75 m²	15.00 m²	13.75 m²	9 m²
Operator data	24 V DC gear drive	●	●	●	●	●
	Mains voltage	230 V – 240 V AC				See the technical manual
	Power input	0.2 kW	0.2 kW	0.2 kW	0.2 kW	
	Pull and push force	1000 N	650 N	750 N	650 N	500 N
	Brief peak force	1200 N	800 N	1000 N	800 N	600 N
	Max. opening speed	25 cm/s [1]	25 cm/s [1]	28 cm/s [1]	20 cm/s [1]	16 cm/s
	Standby	0.6 watt	0.6 watt	0.6 watt	0.6 watt	0.2 watt
	Housing (with galvanized steel base plate)	Plastic	Stainless steel and plastic		Plastic	
	Temperature range	–20 °C to +60 °C				–15 °C to + 45 °C
	Protection category	Only suitable for dry rooms				
Control electronics	Display	Double 7-segment display			LED	
	Operation and programming	Control element with buttons			in the operator cover	
	Impulse sequence control	●	●	●	●	●
	Adjustable power limit	●	●	●	●	●
	Adjustable soft start and soft stop	●	●	●	–	–
	Adjustable belt relief	●	●	●	●	●
	Adjustable operator light, partial opening and ventilation position	●	●	●	●	●
	Adjustable automatic timer	5 – 300 s	5 – 300 s	5 – 300 s	30 – 180 s	30 – 180 s
	Adjustable automatic timer partial opening	5 s – 240 m	5 s – 240 m	5 s – 240 m	–	–
	Adjustable / pre-set operator light	30 – 600 s / 60 s	30 – 600 s / 60 s	30 – 600 s / 60 s	– / 120 s	– / 120 s
	High-speed opening	●	●	●	●	●
Equipment	Hand transmitter (868 MHz)	HSE 4 BS (black structured surface with chrome caps)			HSE 4 BS (textured surface black with plastic caps)	
	Integrated receiver (868 MHz)	Bi-directional 7-channel receiver BS				
	Bluetooth receiver	●	●	●	○ [2]	○ [2]
	LED lighting / LED chase light	60 LEDs / –	20 LEDs / –	30 LEDs / ●	10 LEDs / –	10 LEDs / –
	Connection for photocell / closing edge safety device	● / ●	● / ●	● / ●	● / ●	● / ●
	Connection of external control elements	●	●	●	●	●
	Connection for emergency battery	●	●	●	●	●
	Quick release operated from the inside	●	●	●	●	●
	Connecting lead with Euro plug	●	●	●	●	●
	Anti-lift kit for break-in resistance equipment	●	●	●	●	●
	Universal installation bracket for up-and-over doors and sectional doors	●	●	●	●	●

[1] For sectional garage doors
[2] In conjunction with receiver HET-BLE

● = Standard
○ = Optional

Dimensions in mm

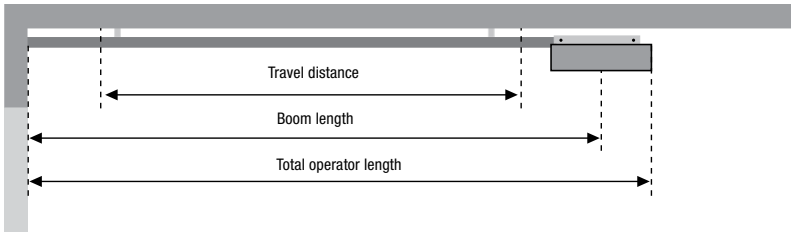

Type of boom	Overall length	Boom length	Travel distance
K Short boom	3200	2975	2475
M Medium boom	3450	3225	2725
L Long boom	4125	3900	3400

Boom applications for Hörmann garage doors	Height
K Up-and-over garage doors Sectional garage doors with track application N Sectional garage doors with track application Z, L, H	Up to 2500 Up to 2250 Up to 2125
M Up-and-over garage doors Sectional garage doors with track application N Sectional garage doors with track application Z, L, H	Up to 2750 Up to 2500 Up to 2375
L Sectional garage doors with track application N, Z, L, H	Up to 3000

Note the travel distance for doors of other makes!

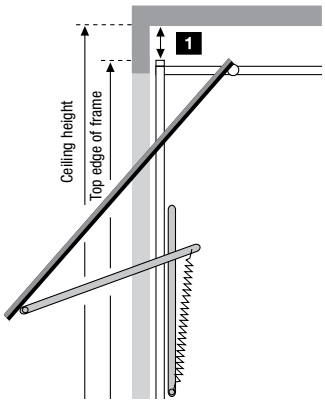

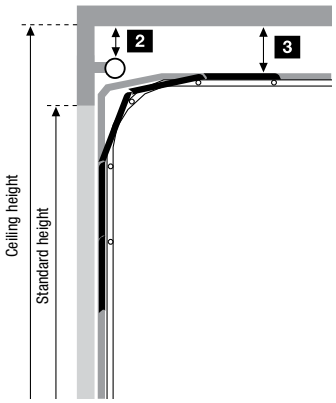

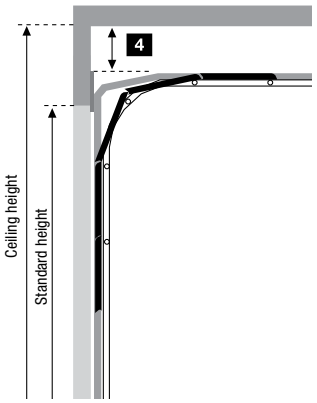

Required space

1 Up-and-over garage doors	
N80	0
N80, design 905, design 941 or with timber infill	15
DF98, DF95, DF80	65

2 Sectional garage doors with torsion spring technology	
With track application N; ceiling height = standard height +210	0
With track application H	0

3 Sectional garage doors with torsion spring technology	
With track application L; ceiling height = standard height +115	15

4 Sectional garage door with tension spring assembly	
With track application Z; ceiling height = standard height +115	15

Doors of other makes	
Between the highest point of the door travel and the ceiling	30

Please note:
The operators on double-skinned doors directed towards the sunlight should be fitted 40 mm higher due to possible section deflection.
All dimensions are minimum dimensions in mm.

Technical data

Hinged gate operators RotaMatic

		BiSecur RotaMatic	BiSecur RotaMatic P	BiSecur RotaMatic PL	BiSecur RotaMatic Akku Solar
Door cycles (OPEN / CLOSE)	Per day / hour	20 / 5	40 / 10	40 / 10	5 / 2
Suitable for:	Max. door height	2000 mm	2000 mm	2000 mm	2000 mm
	Leaf width min. – max.	1000 – 2500 mm	1000 – 2500 mm	1500 – 4000 mm	1000 – 2500 mm
	Max. door leaf weight	220 kg	1000 kg [1]	1000 kg [1]	120 kg
Operator data	Motor	24 V DC gear drive			
	Mains voltage	230 V – 240 V AC, 50 Hz			Replacement battery WA24 / solar module
	Max. spindle speeds	Approx. 25 mm/s	Approx. 25 mm/s	Approx. 25 mm/s	Approx. 15 mm/s
	Nominal force	440 N	540 N	540 N	220 N
	Max. pull / push force	2200 N	2700 N	2700 N	1100 N
	Standby	0.8 watt	0.8 watt	0.8 watt	0.4 watt
	Housing	Aluminium / weather-resistant plastic	Aluminium / die-cast zinc / weather-resistant plastic		Aluminium / weather-resistant plastic
	Temperature range	–20 °C to +60 °C			–15 °C to + 45 °C
	Protection category	IP 44	IP 44	IP 44	IP 44
Control electronics	Protection category (separate control housing)	IP 65	IP 65	IP 65	IP 65
	Impulse sequence control	●	●	●	●
	Power limit	●	●	●	●
	Soft start and soft stop	●	●	●	●
	Adjustable automatic timer	●	●	●	●
	Number of connectable safety devices	3	3	3	3
End-of-travel position	CLOSE	Can be set with an integrated limit switch or end stop			
	Open	Programmable (i.e. no end stop required!)			
Equipment	Hand transmitter (868 MHz)	HSE 4 BS (textured surface black with plastic caps)			
	Integrated receiver (868 MHz)	Bi-directional 5-channel receiver			
	Query of the gate position	●			
	Bluetooth receiver	○ [2]			
Electrical connection	Mains lead	230 V, NYY 3 × 1.5 mm² (on-site, max. length 30 m)			–
	Motor cable	NYY 5 × 1.5 mm² (on-site)			
	Additional connection cable	All cables underground NYY, e.g. 5 × 1.5 mm² (on-site, max. length 30 m)			
	Electric lock connecting lead	NYY 3 × 1.5 mm² (on-site, maximum length 30 m) underground H07RN-F 2 × 1 mm² on the door leaf			

Lay all cables separately!

[1] Dependent on door size, door infill and wind load. For further information, please contact your Hörmann sales partner.
[2] In conjunction with receiver HET-BLE

● = Standard
○ = Optional

Dimensions in mm

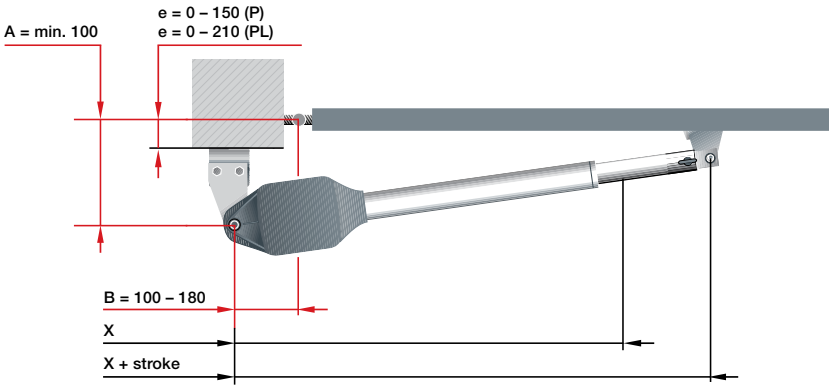

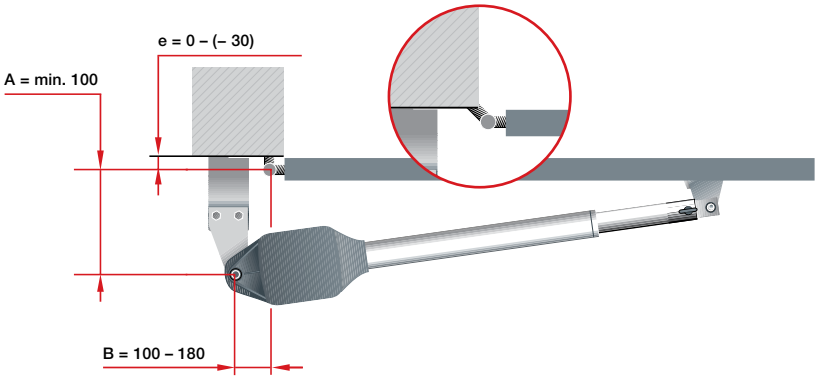

RotaMatic

Dimensions:	x	x + stroke
RotaMatic / RotaMatic P	720	1120
RotaMatic PL	820	1320

e = distance between gate pivot and mounting plate

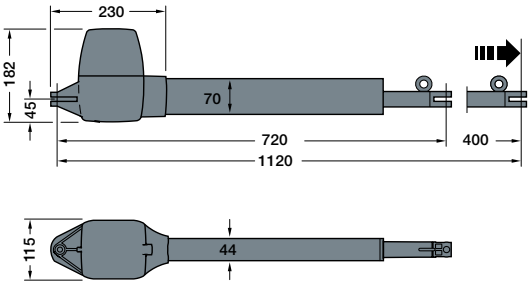

Fitting situation
Door opening outwards

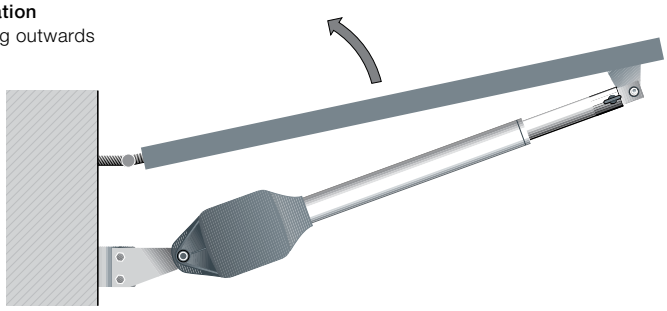

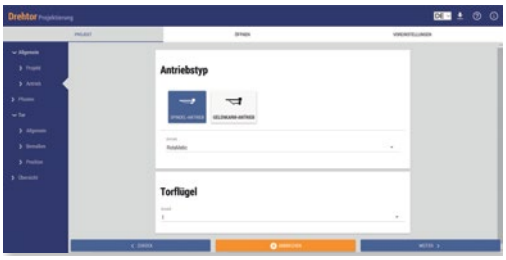

For Hörmann partners
With the planning program for hinged gate operators, Hörmann supports you in planning and fitting your hinged gate operator.
You can find the program at https://dpp.hoermann.com

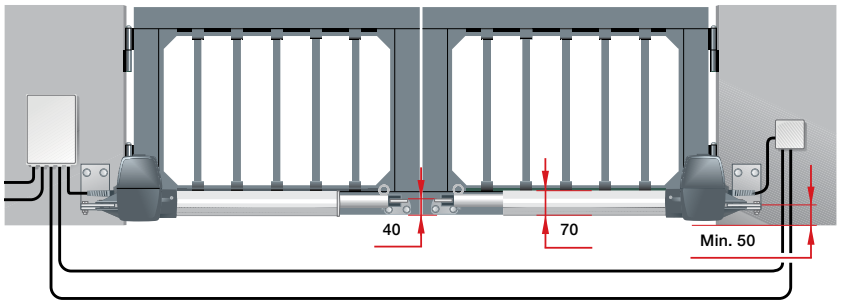

Please note:
To ensure optimum gate travel, the maximum difference between the A dimension and the B dimension must be 40 mm.
All illustrations and information with standard tracks. Additional equipment features possible.

Dimensions in mm

Technical data

Hinged gate operators VersaMatic

		BiSecur VersaMatic	BiSecur VersaMatic P	BiSecur VersaMatic Akku Solar
Door cycles (OPEN / CLOSE)	Per day / hour	20 / 5	40 / 10	5 / 2
Suitable for:	Max. door height	2000 mm	2000 mm	2000 mm
	Leaf width min. – max.	1000 – 2000 mm	1000 – 3000 mm	1000 – 2000 mm
	Max. door leaf weight	200 kg	900 kg [1]	150 kg
Operator data	Motor	24 V DC gear drive		
	Mains voltage	230 V – 240 V AC, 50 Hz		Replacement battery WA24 / solar module
	Nominal torque	50 Nm	60 Nm	40 Nm
	Maximum torque	250 Nm	300 Nm	200 Nm
	Maximum idle speed	Approx. 2.6 rpm	Approx. 2.7 rpm	Approx. 1.7 rpm
	Standby	0.8 watt	0.8 watt	0.4 watt
	Housing	Aluminium / zinc die-cast / weather-resistant, glass-fibre reinforced plastic		
	Temperature range	–20 °C to +60 °C		–15 °C to + 45 °C
	Protection category	IP 44	IP 44	IP 44
Control electronics	Protection category (separate control housing)	IP 65	IP 65	IP 65
	Impulse sequence control	●	●	●
	Power limit	●	●	●
	Soft start and soft stop	●	●	●
	Adjustable automatic timer	●	●	●
	Number of connectable safety devices	3	3	3
End-of-travel position	CLOSE	Adjustable via integrated end stop or end stop on site		
	Open	Adjustable through integrated end stop or programmable (i.e. no on-site end stop required!)		
Equipment	Hand transmitter (868 MHz)	HSE 4 BS (textured surface black with plastic caps)		
	Integrated receiver (868 MHz)	Bi-directional 5-channel receiver		
	Query of the gate position	●		
	Bluetooth receiver	○ [2]		
Electrical connection	Mains lead	230 V, NYY 3 × 1.5 mm² (on-site, max. length 30 m)		–
	Motor cable	NYY 5 × 1.5 mm² (on-site)		
	Additional connection cable	All cables underground NYY, e.g. 5 × 1.5 mm² (on-site, max. length 30 m)		
	Electric lock connecting lead	NYY 3 × 1.5 mm² (on-site, maximum length 30 m) underground H07RN-F 2 × 1 mm² on the door leaf		

Lay all cables separately!

[1] Dependent on door size, door infill and wind load. For further information, please contact your Hörmann sales partner.
[2] In conjunction with receiver HET-BLE

● = Standard
○ = Optional

Dimensions in mm

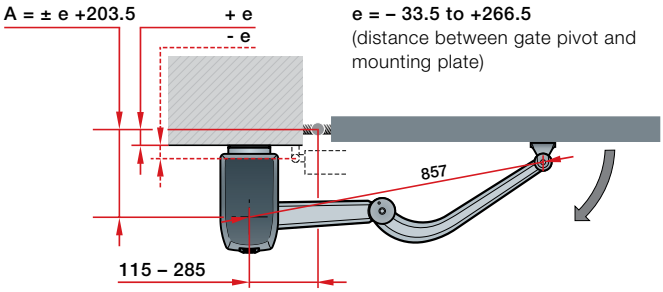

e = – 33.5 to +266.5
(distance between gate pivot and mounting plate)

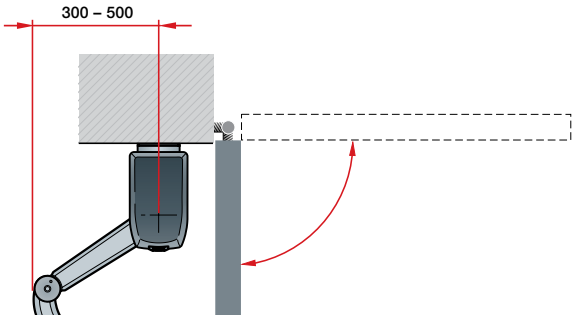

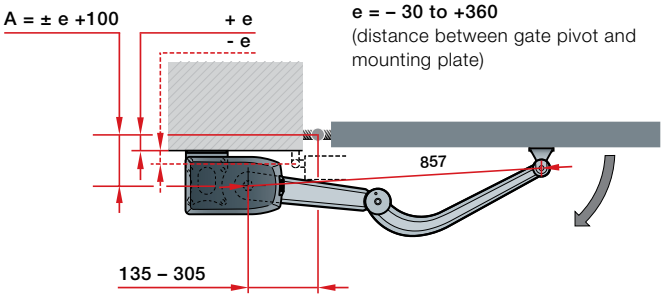

e = – 30 to +360
(distance between gate pivot and mounting plate)

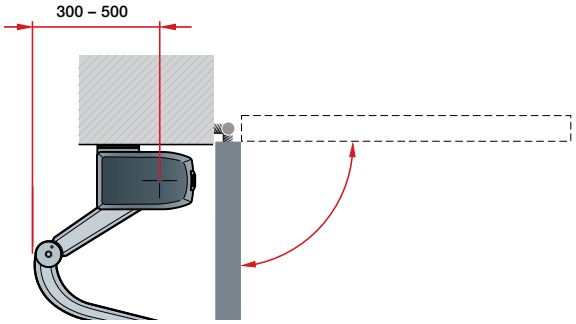

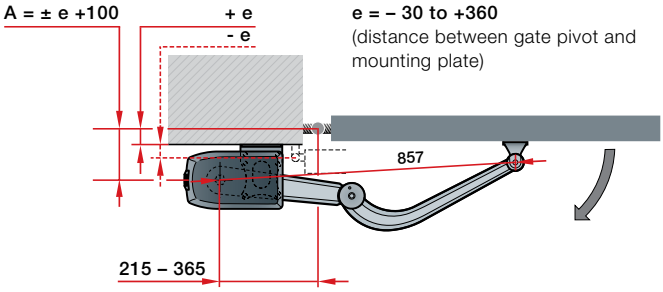

e = – 30 to +360
(distance between gate pivot and mounting plate)

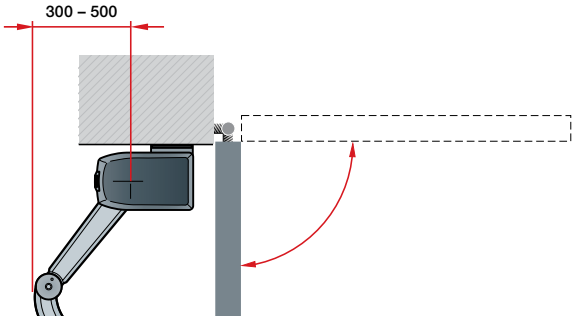

Fitting situation
Door opening outwards

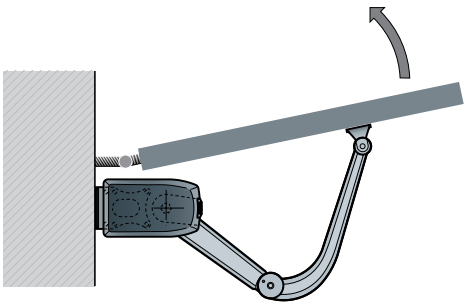

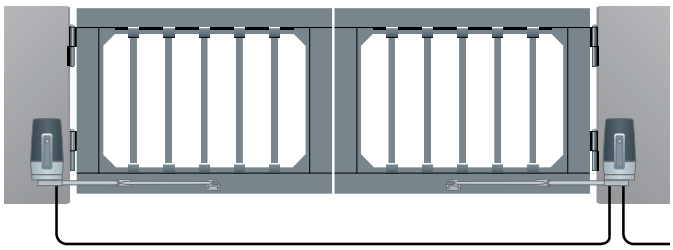

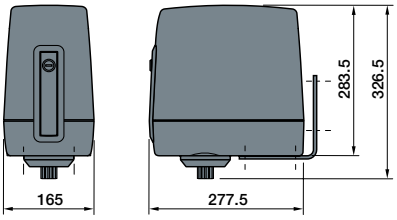

Dimensions in mm

Please note:
All illustrations and information with standard tracks. Additional equipment features possible.

Technical data

Sliding gate operators LineaMatic, STA 500 FU

		BiSecur LineaMatic	BiSecur LineaMatic P	LineaMatic H	BiSecur LineaMatic Akku Solar	STA 500 FU
Door cycles (OPEN / CLOSE)	Per day / hour	20 / 5	40 / 10	40 / 10	5 / 2	100 / 10
Suitable for:	Max. door height	2000 mm	2000 mm	3000 mm	2000 mm	3000 mm
	Min. – max. door width	800 – 6000 mm	800 – 8000 mm	800 – 10000 mm	800 – 6000 mm	1000 – 17000 mm
	Max. door weight For bottom-guided gates For self-supporting gates	 300 kg 250 kg	 500 kg 400 kg	 800 kg 600 kg	 200 kg 150 kg	 2500 kg 1800 kg
Operator data	Motor	24 V DC gear drive				1-phase current gear drive
	Mains voltage	230 V – 240 V AC, 50 Hz			Replacement battery WA24 / solar module	230 V – 240 V AC, 50 Hz
	Max. door travel speeds	Approx. 22 cm/s	Approx. 20 cm/s	Approx. 15 cm/s	Approx. 15 cm/s	Approx. 20 cm/s
	Nominal force	160 N	240 N	280 N	160 N	350 N
	Maximum tensile and compressive force	800 N	1200 N	1400 N	800 N	1750 N [1]
	Standby	0.8 watt	0.8 watt	0.8 watt	0.4 watt	< 2 watt
	Housing	Zinc die-cast / weather-resistant plastic				Weather-resistant plastic
	Temperature range	–20 °C to +60 °C			–15 °C to + 45 °C	–20 °C to +45 °C
	Protection category	IP 44	IP 44	IP 44	IP 44	IP 65
Control electronics	Control integrated in the housing	●	●	●	●	●
	Adjustable power limit	●	●	●	●	●
	Adjustable soft start and soft stop	●	●	●	●	●
	Magnetic limit switch	●	●	●	●	
	Electronic door position sensor					●
	Integrated automatic timer	●	●	●	●	●
	Pedestrian passage programmable	●	●	●	●	●
	Number of connectable safety devices	3	3	3	3	3
Equipment	Hand transmitter (868 MHz)	HSE 4 BS (textured surface black with plastic caps)		Without remote control	HSE 4 BS (textured surface black with plastic caps)	Without remote control
	Integrated receiver (868 MHz)	Bi-directional 5-channel receiver			Bi-directional 5-channel receiver	
	Query of the gate position	●		○ [2]	●	○ [2]
	Bluetooth receiver			○ [3]		
Electrical connection	Mains lead	230 V, NYY 3 × 1.5 mm² (on-site)			–	230 V, NYY 3 × 1.5 mm² (on-site)
	Additional connection cable	All cables underground NYY, e.g. 5 × 1.5 mm²				
	Foundation dimensions	Min. 440 × 290 × 800 mm (frost-resistant)				710 × 410 × 800 mm (frost-resistant)
	Connecting lead	See Figure for position of tube				

Lay all cables separately!

[1] Brief peak force 2500 N
[2] Optional with ESE
[3] In conjunction with receiver HET-BLE

● = Standard
○ = Optional

Dimensions in mm

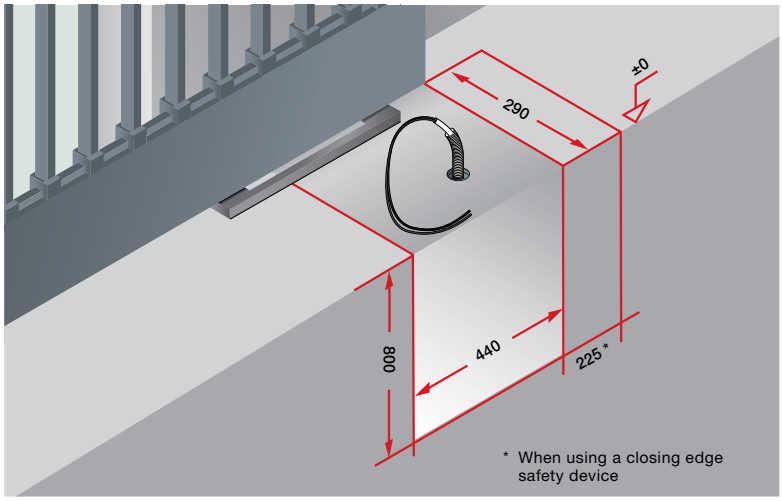

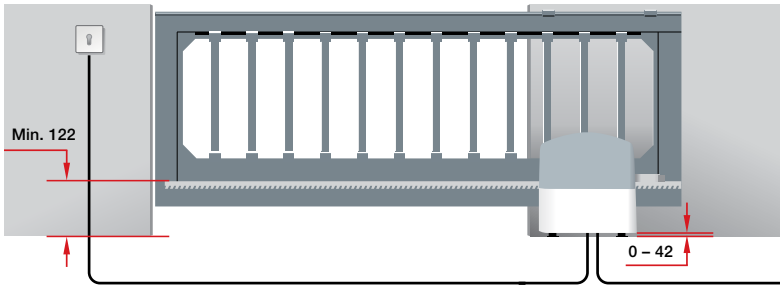

LineaMatic

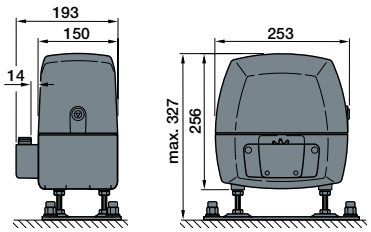

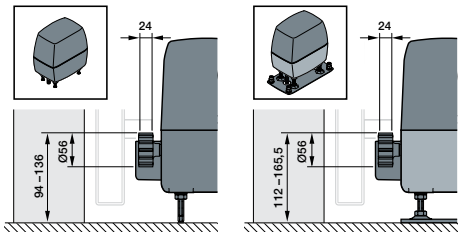

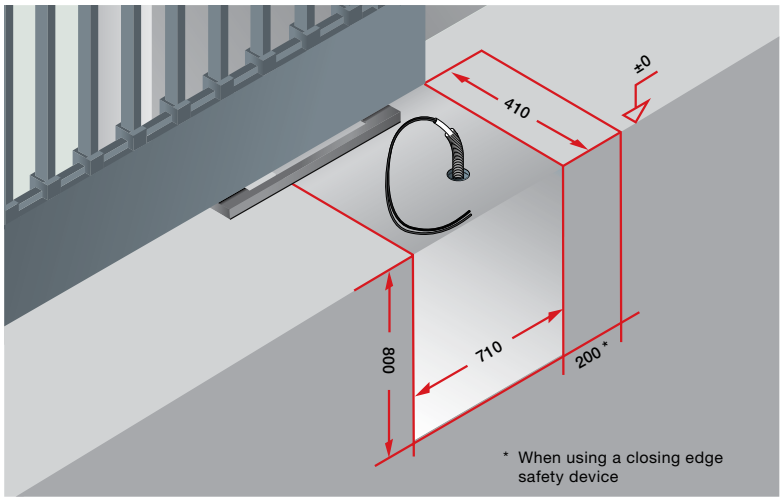

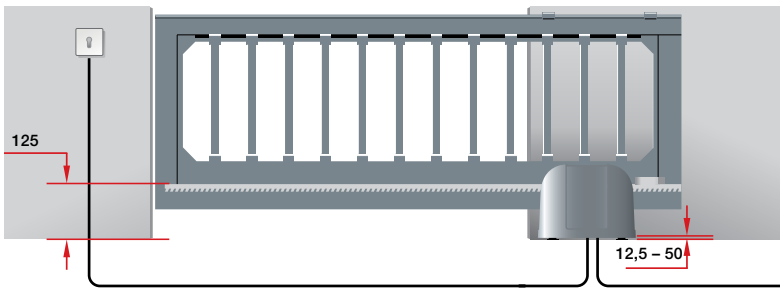

STA 500 FU

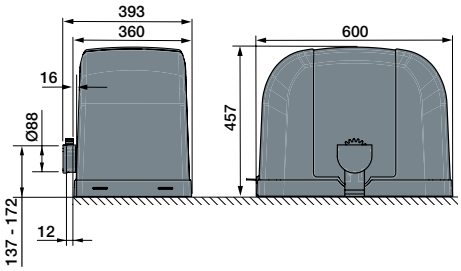

Dimensions in mm

Please note:
In order to comply with the requirements of DIN EN 13241, we recommend using a closing edge safety device.

Hörmann.
For Life.

Whether you are building your home or modernising it, you desire a place full of joy, security and relaxation. Thanks to their sustainable and particularly durable quality, Hörmann products will become a reliable part of your home – made to last for generations.



GARAGE DOORS. GATE AND DOOR OPERATORS. SMART HOME SYSTEMS. ENTRANCE DOORS. RESIDENTIAL INTERNAL DOORS. LOFT DOORS. STEEL DOORS. DOOR FRAMES. STORAGE SPACE SYSTEMS.







Some of the products shown feature special equipment and do not always correspond to the standard versions. The surface finishes and colours shown are subject to the limitations of the printing process and cannot be regarded as binding. All RAL colours are based on the RAL colour chart. All rights reserved. No part may be reproduced without our prior permission. Subject to changes.

Last updated 05.2026 / Printed 10.2026 / HF 85945 EN / SAP 368414 / PDF / Printed on 100% recycled paper

HÖRMANN