

DOOR AND PERIMETER SOLUTIONS FOR COLLECTIVE GARAGES

Doors, operators, perimeter protection systems

HÖRMANN


HÖRMANN





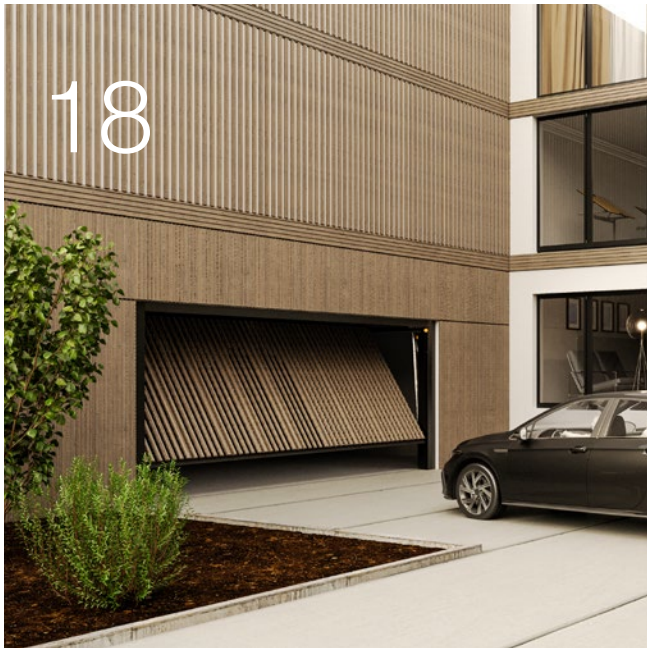



Content

4 Good reasons to try Hörmann

18 Application areas

24 Technology, equipment, accessories

24 Chain drive operators

26 Shaft operators

30 Accessories

38 Dimensions and technical manual

Brand quality made in Germany

The family-owned company Hörmann offers all important construction components for building and renovating projects from a single source. We manufacture in highly specialised factories using state-of-the-art production technologies.
Our employees work intensively on new products, continual further developments and improvements to details. The results are patents and one-of-a-kind products you can depend on.












SUSTAINABILITY DOCUMENTED. We have had Environmental Product Declarations (EPD) drawn up by ift Rosenheim for our collective garage doors, industrial sectional doors, rolling shutters, rolling grilles and many other products. The EPDs were created in accordance with ISO 14025 and EN 15804 and are listed in the EcoBudat of the Federal Ministry of Housing, Urban Development and Building (BMWSB). **NEW.** Hörmann also offers sustainability product passports (NHPP). These contain all the information required for DGNB certification, far exceeding the criteria of ENV1.1 and ENV1.2. This simplifies the certification process and keeps auditor costs low. The NHPPs are stored in the DGNB Navigator. Many of the Hörmann products listed there also meet the more stringent requirements of the DGNB Navigator label. Both the EPD and the DGNB Navigator Label are stored in the Hörmann product portal.

Using the code in the DGNB Navigator label, all product information can be easily accessed in the DGNB Navigator here, for example, for our industrial sectional doors.

➔ Further information on the DGNB Navigator can be found at www.dgnb-navigator.de

calculate
reduce
offset

REDUCING EMISSIONS, CONSERVING RESOURCES. As a family business, we are very conscious of our responsibility to future generations. Hörmann's sustainability strategy aims to reduce and avoid greenhouse gas emissions. To ensure we have a valid data set, we calculate our company's carbon footprint every year. We meet 100% of our electrical power needs at all our European production sites using green electricity sourced from renewable sources. Through a range of measures, we are reducing our emissions and thereby saving more than 75000 tonnes of CO_2 each year. In addition, we provide support for climate protection projects and thereby perform CO_2 offsetting. Currently, for example, we offset more than 550000 tonnes of CO_2 per year. This corresponds to the emissions generated by the procurement, production and distribution of Hörmann products for residential construction. We offer our customers the opportunity to play an active part: if they wish, when buying our products for commercial and industrial construction, they can also make a contribution to climate protection projects.

ClimatePartner certified product
climate-id.com/XNEBKC

ClimatePartner certified product
climate-id.com/FYZNUF

Sustainable planning for trend-setting construction

Experienced specialists within our customer-oriented sales organisation accompany you from the planning stage, through technical clarification up to the final building inspection. Complete working documentation, such as technical manuals, is always accessible and up-to-date at www.hormann.co.uk.



Product Portal
For architects and planners

PRODUCTS
FOR BIM

We are a member of the professional association for digital building products in the Federal Association of Building Systems e.V.

QUICK AND EASY TO REACH YOUR DESTINATION.

With a clear operating structure and search function, the ProductPortal offers you quick access to tender texts, technical data, certificates, CAD drawings and much more. In addition, BIM data can be provided for many products for the Building Information Modelling process, enabling efficient planning, drafting, construction and management of buildings. Photos and photo-realistic presentations provide additional information on many products.

➔ Texts for invitations to tender, CAD drawings, BIM data and documents for your project can be found at https://hbp.hoermann.com/uk/portal

HoePlan

CUSTOMISED DRAWING AT THE TOUCH OF A BUTTON.

With our digital tool, you receive a detailed, dimensioned drawing of the product in DWG or PDF format already included when the quotation is prepared. This simplifies and speeds up technical clarification and secures the entire ordering process.



Easy to fit and service

All door components are supplied in an installation-friendly way, ensuring that the doors can be fitted easily and without any error as quickly as possible. This reduces fitting times and costs. In addition, the new generation of industrial doors can also be integrated into digital service and remote maintenance concepts. This lowers the maintenance and service costs, making Hörmann doors economical and sustainable.



Service around the clock

FAST SERVICE. Our teams of highly qualified specialists travel all around Germany. But Hörmann also offers consulting, maintenance and repairs in many other countries. Our network of over 500 service technicians guarantees speed and flexibility. We are available around the clock. Our customers can rely on us.

10-year guaranteed availability

HÖRMANN SPARE PARTS. It goes without saying that spare parts for doors, operators, and controls are original Hörmann parts that come with a guaranteed availability of 10 years.

BlueControl

SMART GATE SETTING. Initial start-up, service and maintenance of industrial doors is easy and convenient with the BlueControl app.

NetControl

INTELLIGENT NETWORKING. The NetControl gateway displays important information about the doors, such as status, error messages, cycles, opening duration and maintenance instructions. This reduces costs for service visits and prevents downtime through preventive replacement of wear partsfor robust logistics processes concerning your door system.

➔ Available for sectional doors, non-protruding up-and-over doors ET500-3 and sliding doors ST 500 with operator ITO 500 FU and control unit 560.



Perfectly matched door systems

As the need for parking space in cities and urban centres continues to increase, underground and collective garages are becoming increasingly important. These garages are often built in mixed-use residential and commercial areas. This requires door systems that are particularly quiet. Compliance with the acoustic rating requirements in accordance with DIN 4109 depends on the acoustic planning and design of the building structure.





QUIET, DEPENDABLE DOOR TRAVEL.
Hörmann collective garage door systems are equipped with soft start and soft stop as standard in SupraMatic HT, WA 300 S4 / WA 300 R S4 / WA 300 AR S4, WA 500 FU and ITO 500 FU, making them extremely quiet in all phases of opening and closing.

➔ For further information, see from page 24.



ALL-ROUND WELL SECURED. When opening and closing, the non-protruding up-and-over door ET 500-3 does not swing out and is therefore optimal for collective garages opening onto pavements, for example. 2 integrated photocells also secure the opening area of the door.

➔ Further information can be found starting on page 18.



SUITABLE MOUNTING SOLUTIONS.
With a range of track applications, our doors can be optimally matched to the requirements of your door opening. With the right door version and size, sectional doors with low headroom track application and swivel mechanism, for example, can achieve the full clear passage height with a required headroom of just 200 mm.

LEFT. Non-protruding up-and-over door ET 500 series 3, style 405 with on-site cladding

Secure and controlled entrances and exits

Hörmann offers perfectly matched systems designed specifically for collective garages, comprising doors, operators, perimeter protection and a comprehensive range of accessories, such as warning light systems, barrier systems and parking facility systems.



Tested and certified

APPROVED SAFETY UNIT. With Hörmann door systems, you will benefit from the valuable experience of Europe's leading manufacturer. At Hörmann, the door and operator are always tested and certified as a unit

Soft start Soft stop

Opening speed up to 0.5 m/s

QUICK DOOR OPENING. The SupraMatic operator is available in three versions depending on requirements and features an opening speed of up to 0.22 m/s. With the operator ITO 500 FU, developed specifically for collective garages, you can open the non-protruding up-and-over doors ET 500-3 and sliding doors ST 500 particularly quickly with an opening speed of up to 0.5 m/s.

PERIMETER SOLUTIONS. From underground garages in hotels and commercial buildings to collective garages in leisure facilities and multi-storey car parks, Hörmann offers the ideal components with garage doors and barriers. Hörmann provides solutions for access authorisation at entrances and exits, number plate recognition via cameras, individual ID card management and smart controls for doors and barriers.

LEFT. Underground garage rolling grille DD HG-L; Hörmann barrier SH 300 with barrier flat boom,

Intelligent operating comfort and perimeter protection

Hörmann offers you a comprehensive range of accessories from hand transmitters and control elements to posts and warning light systems. For advanced ID card management across a wide range of ID card media, we offer the web server-based OnlineControl interface, which allows users to manage these functions locally within the network.



BiSecur

Only from Hörmann

CERTIFIED SAFETY. The bidirectional BiSecur radio system with particularly secure encryption protocol and stable, interference-free range makes sure that no one can copy your radio signal. This is also confirmed by the security experts of Bochum University and independent test institutes. All operators, receivers and control elements with BiSecur radio technology are 100% compatible with each other.

➔ Watch the video on YouTube or www.hormann.co.uk/media-centre
➔ For further information, see from page 30.

SPECIFICALLY FOR COLLECTIVE GARAGES. With the optional collective garage receiver and the easy-to-use software, you can conveniently and clearly manage up to 1000 hand transmitters.
Using the respective hand transmitter programming device, the 868 MHz fixed codes* of the hand transmitters can be read in and assigned to individual flats, and the radio codes transferred to the collective garage receiver via a memory card.

* No BiSecur radio

UNIVERSAL CONTROL. The HAC kit is a universal interface for collective garage and barrier controls. It consists of a compact control box with an integrated web server running the OnlineControl software. The HAC kit enables the connection of a wide variety of readers for identification and access control.
The OnlineControl software enables convenient management of access authorisations for barriers and collective garage doors either in a local network or worldwide via the OnlineControl.live service.

LEFT. Non-protruding up-and-over door ET 500 series 3, style 420, Anthracite grey RAL 7016

Reliable door systems for collective garages

A suitable door and operator system is primarily designed by indicating the required number of cycles per hour/day. Due to the different construction projects for collective garages (residential buildings, office buildings etc.), the required maximum cycle number must be indicated by the architect/planner during the planning stage.



PLANNING AID FOR COLLECTIVE GARAGES. The table below serves as a planning aid for selecting a suitable door system. Please note that using a timer can significantly reduce door cycles during peak times in particular. With these additional accessories, a more cost-effective system may be available for your requirements. In addition, the service life of your door system increases, along with the cycle for wearing part replacement.

Door type	Operator	Parking spaces [1]	Max. door cycles [2] per		Max. clear passage in mm	
			Day	Hour	Width	Height [3]
Non-protruding up-and-over door ET 450	SupraMaticHT	Up to 100	300	20	4500	2500
Non-protruding up-and-over door ET 500-3	SupraMaticHT	Up to 100	300	20	6000	3000
	ITO 500 FU	Over 100	450	30	6000	3000
Sliding door ST 500	SupraMaticHT	Up to 100	300	20	6000	3000
	ITO 500 FU	Over 100	450	30	6000	3000
Underground garage rolling shutter TGT	WA 300 R S4	Up to 30	100	20	5000	2400
	WA 300 AR S4	Up to 30	100	20	5000	2400
Underground garage rolling grille TGT	WA 300 R S4	Up to 30	100	20	6000	2400
	WA 300 AR S4	Up to 30	100	20	6000	2400
industrial sectional door	WA 300 S4 [4]	Up to 100	300	20	6000	3000
	WA 500	Up to 100	300	15	4500	3000
	WA 500 FU	Over 100	450	30	8000	3000
Up-and-over door N 500	SupraMaticHT	Up to 50	150	10	5500	2580
Up-and-over door N 80	Optional	Up to 2			2840	2660

[1] The parking spaces information relates to the assumption of 3 door cycles / parking space / day.
[2] The information refers to the max. passage height. One door cycle consists of one Open / Close phase.
[3] Greater door heights on request.
[4] A technical inspection is required for maximum door sizes.

LEFT. Non-protruding up-and-over door ET 500 series 3, style 413, Anthracite grey RAL 7016

Underground garage doors

An economical complete solution with a range of design options





NON-PROTRUDING UP-AND-OVER DOOR ET 450. The non-protruding up-and-over door ET 450 is extremely cost-effective and is ideal for collective garages. An additional second photocell provides increased personal protection.

- Photocell integrated in the door frame
- Space-saving fitting dimensions
- Limited frame depth of max. 530 mm
- Leaf frame with 80 mm wide and 60 mm deep external profiles
- Approved door and operator unit
- Door construction designed for at least 250000 door cycles

NON-PROTRUDING UP-AND-OVER DOOR ET 500-3. The non-protruding up-and-over door ET 500 series 3 does not swivel out during opening and closing, and so the area in front of the door can be taken full advantage of. It is therefore optimal for collective garages opening onto pavements, for example. An additional second photocell ensures a particularly high level of safety for personal protection.

- Photocell integrated in the door frame
- Also available with wicket door
- Integrated in the facade due to on-site infill
- Side door with matching door style infill available
- Compact fitting dimensions
- Limited frame depth of max. 530 mm
- The leaf frame consists of 80 mm wide and 90 mm deep external profiles
- Approved door and operator unit
- Door construction designed for at least 1 million door cycles

➔ For further information, see the “Double and collective garage doors” brochure.





SLIDING DOOR ST 500. The collective garage sliding door ST 500 requires very little fitting depth. As a result, parking spaces can also be used directly next to the door. Thanks to the narrow subframe, it can also be fitted with very low headroom.

- Photocell integrated in the door frame
- Also available with wicket door
- Integrated in the facade due to on-site infill
- Side door with matching door style infill available
- Approved door and operator unit
- Door construction designed for at least 250000 door cycles

UP-AND-OVER DOOR N 500. The sturdy and open construction ensures precise and safe opening and closing. Thanks to the automatic door locking of the operator, the door is secure.

- Operator package SupraMatic HT incl. photocell EL 301 and tension spring set for max. 100000 door cycles
- Integrated in the facade due to on-site infill
- Also available with wicket door
- Particularly smooth, quiet door travel and virtually silent opening and closing
- Approved unit of door and door operator for a long service life, minimum wear of the operator, high operational safety and low operating costs

➔ For further information, see the “Double and collective garage doors” brochure.

Underground garage doors

An economical complete solution with a range of design options





UP-AND-OVER DOOR N 80. Up-and-over doors are ideally suited for reliably closing off parking spaces in collective garages, due to their sturdy construction and uncomplicated operation.

- Securely locked
- Optimum ventilation
- Sturdy construction
- Simple and reliable operation (optionally with an operator)

➔ For further information, see the “Up-and-over garage doors” brochure.

INDUSTRIAL SECTIONAL DOORS. Sectional doors open vertically upwards. This creates space both in front of and behind the door. With the frame fitted behind the opening, the clear passage of the garage opening can be fully utilised. This virtually eliminates the risk of damage, for example to wing mirrors. Sectional doors are also very easy to repair. The individual door sections can be quickly and easily replaced.

- Ideal for tight spaces
- No swivelling out of the door leaf
- Low headroom track application with the operator mounted directly on the door and no obstructive elements in the middle of the room
- Very easy to repair thanks to replaceable door sections
- Side door NT 60 with matching door style infill available
- 200000 door cycles with specially dimensioned torsion springs
- Approved door and operator unit

➔ For further information, see the “Industrial sectional doors” brochure.



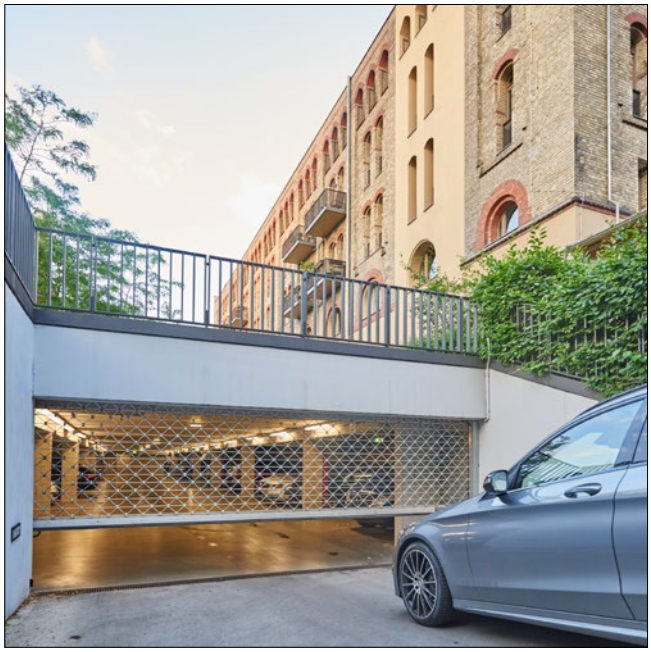

UNDERGROUND GARAGE ROLLING SHUTTER / ROLLING GRILLE TGT. Rolling shutters and rolling grilles are particularly robust thanks to their simple design. The compact barrel requires little space near the lintel area. Exterior fitting is also possible if space is very tight.

- Specially dimensioned tension spring assembly for quiet door travel
- Service life of more than 200000 door cycles
- Standard curtain cover to prevent dangerous reaching into the barrel
- Smooth-running operator WA 300 R S4 with optimal gear ratio
- Elegant operator solution with operator WA 300 AR S4 integrated into the curtain cover
- Maximum security thanks to standard power limit in “OPEN” / “CLOSE” directions
- Closing edge or lintel trap guard not required
- Emergency/maintenance release for quick and easy manual opening of the door

➔ For further information, see the “Rolling shutters and rolling grilles” brochure.

- Optional marten protection for rolling grilles keeps small animals out
- Side door NT 60R with matching door style infill available
- Approved door and operator unit

Car park management

System solutions that pay off

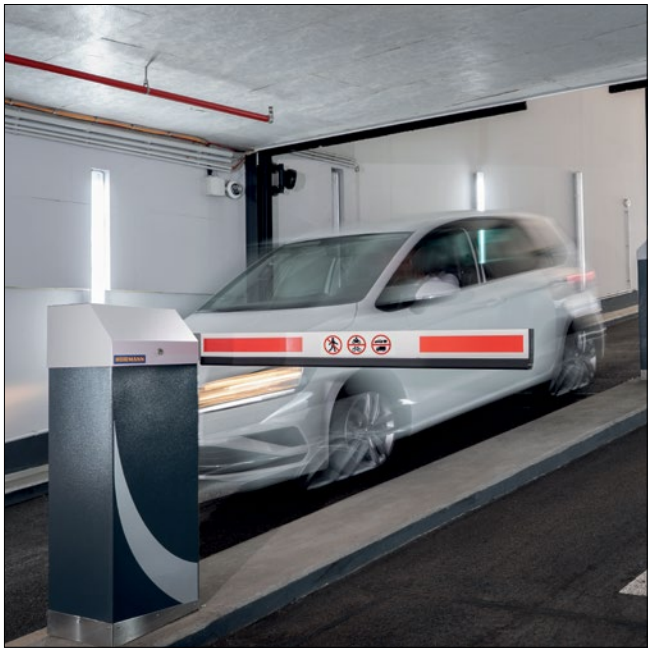



BARRIERS. Hörmann barrier systems offer you an ideal solution for long-term parking systems, from employee car parks and underground garages in hotels to parking spaces for residential complexes.

- Various barrier designs with anti-vandalism planetary gear and intelligent impact protection
- Folding barrier boom version for applications with limited height
- Entry and exit controls with simple control elements or system solutions, incl. ID card management

PARKING FACILITY SYSTEMS. Large shopping centres and medical complexes often have car parks with pay station systems. For this purpose, Hörmann can provide all the components you need for car park management from a single source.

- Pay station system for simple and fast payment using coins, bank notes and debit or credit cards
- Convenient number plate recognition for easy entry and exit as well as payment without a parking ticket
- Web server with global access to the entire parking system as well as fault display and troubleshooting

➔ For further information, see the “Barriers and pay station systems” brochure.



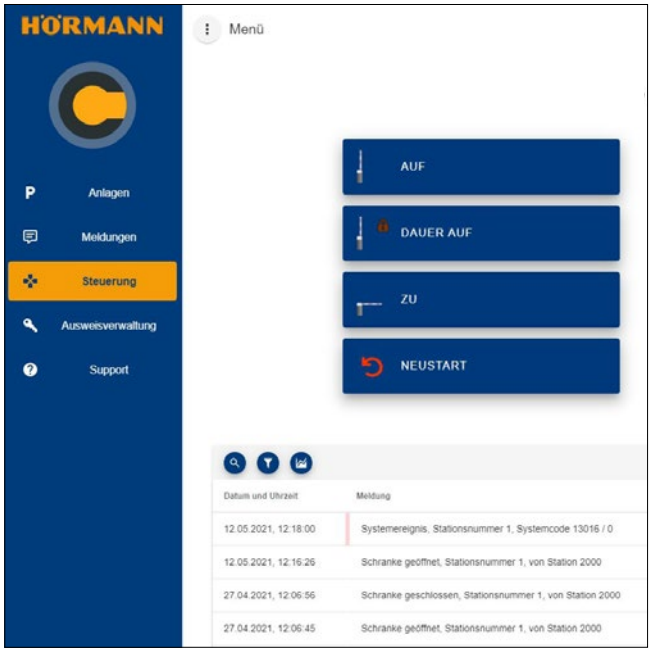

HAC KIT. The HAC kit is a universal interface for collective garage, barrier and bollard controls. It consists of a compact control box with an integrated web server running the OnlineControl software. The HAC kit enables the connection of a wide variety of readers for identification and access control.

- Connection of QR code readers, far-range and short-range RFID readers and number plate recognition cameras
- Control of barriers, doors and bollards upon valid authorisation
- ID card management for up to 2000 parking IDs

ONLINECONTROL. The OnlineControl software runs on the HAC kit web server and enables convenient management of access authorisations for barriers, bollards and collective garage doors either in a local network or worldwide via the OnlineControl.live service.

- Management of up to 2000 parking IDs across 8 user groups
- Control via a web browser in a local network or worldwide via OnlineControl.live
- Access rights that can be set for specific times (e.g. for hotel and campsite entrances)

➔ For further information, see the “Barriers and pay station systems” brochure.

Operator systems

Chain drive operators with rail



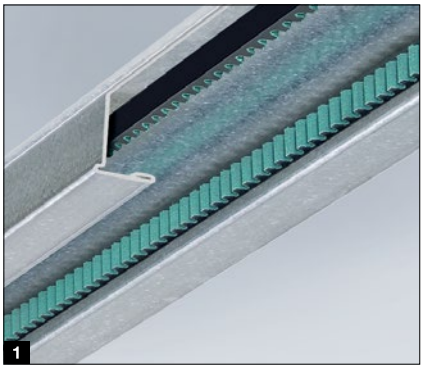



Operator SupraMatic HT

- Soft start and soft stop for gentle, quiet door travel
- Quiet toothed belt technology 1
- Tensile and compressive force 1000 N (peak force 1200 N)
- Integrated control electronics including double 7-segment display for simple adjustment of operator functions directly on the operator
- Optional external control 360 2 (for connecting traffic control, warning lights or additional prints)
- Patented door locking mechanism in the operator rail with emergency/maintenance release from the inside
- Connecting lead with CEE plug, second suspension
- For doors with a spring safety device
- Up to 6750 mm width (7000 mm on request), or 3000 mm height
- For standard track application (N) and low headroom track application (L)
- For doors with wicket door, ALR F42 Glazing and real glass on request
- Not for sectional doors with 67 mm depth

0.22 m/s opening speed

Door types / application areas

Non-protruding up-and-over door ET 450
Up to 100 parking spaces,
max. 150 door cycles* per day
Max. 20 door cycles* per hour
Max. door width 4500 mm
Max. door height 2500 mm

Non-protruding up-and-over door ET 500-3 / sliding door ST 500
Up to 100 parking spaces,
max. 300 door cycles* per day
Max. 20 door cycles* per hour
Max. door width 6000 mm
Max. door height 3000 mm

industrial sectional door
Up to 100 parking spaces,
max. 300 door cycles* per day
Max. 20 door cycles* per hour
Max. door width 7000 mm
Max. door height 3000 mm
For standard track application (N)
and low headroom track application (L)

Up-and-over door N 500
Up to 25 parking spaces
Max. 75 door cycles* per day
Max. 10 door cycles* per hour
Max. door width 5000 mm
Max. door height 2750 mm

* The information refers to the max. passage height. One door cycle consists of one Open / Close phase.





1



2

ITO 500 FU

- Soft start and soft stop for gentle, quiet door travel
- Robust operator boom and control chain designed for high loads 1
- Adaptive door action check
- No additional sideroom required
- Emergency/maintenance release via Bowden cable on the slide carriage
- Emergency / maintenance release as standard
- Emergency/maintenance release possible from outside
- Optionally secured release on the inside / outside (ideal for use on facade doors)
- Settings on a separate control via a control panel 545 / 560 2
- For normal fittings (N, ND) and low headroom track application (L, LD)
- Max. door height 4500 mm
- For doors with wicket door on request

Door types / application areas

Non-protruding up-and-over door ET 500-3
Over 100 parking spaces,
max. 450 door cycles [1] per day
Max. 30 door cycles [1, 2] per hour
Max. door width 6000 mm
Max. door height 3000 mm

Sliding door ST 500
Over 100 parking spaces,
max. 450 door cycles [1] per day
Max. 30 door cycles [1, 2] per hour
Max. door width 6000 mm
Max. door height 3000 mm

industrial sectional door
Over 100 parking spaces,
max. 450 door cycles [1] per day
Max. 30 door cycles [1, 2] per hour
Max. door width 8000 mm
Max. door height 3000 mm
For standard track application (N)
and low headroom track application (L)

[1] The information refers to the max. passage height. One door cycle consists of one Open / Close phase.
[2] At a maximum ambient temperature of +40°C, an additional 5 door cycles per hour are possible

0.5 m/s opening speed
For operator ITO 500 FU with control 560

Operator systems

Shaft operators



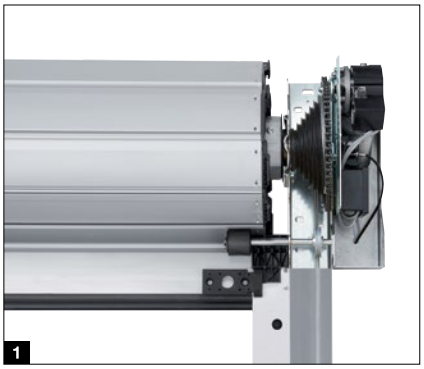



WA 300 S4 / R S4 / AR S4
230 V 1-phase current

- Soft start and soft stop for gentle door travel
- Optional external control 360 (prepared for traffic control)
- Power limit in OPEN / CLOSE directions
- Integrated control with push button DTH-R
- For underground garage rolling shutters or rolling grilles TGT, only 100 mm of additional sideroom is required on the operator side 1
- Small side room of only 200 mm 1
- Optional emergency / maintenance release 2 for easy manual opening of the door in case of power failure
- No installations or wiring on the door leaf door leaf [1)]
- Standby approx. 1 W[2)]

[1)] Except for doors with wicket door
[2)] Power consumption in energy-saving mode without any connected accessories

0.19 m/s opening speed

Door types / application areas

Industrial sectional door
WA 300 S4
Up to 100 parking spaces,
max. 300 door cycles* per day
Max. 20 door cycles* per hour
Max. door width 6000 mm
Max. door height 3000 mm

Underground garage
rolling shutter TGT
WA 300 R S4 / WA 300 AR S4

Up to 30 parking spaces,
max. 100 door cycles* per day
Max. 20 door cycles* per hour
Max. door width 5000 mm
Max. door height 2400 mm

Underground garage
rolling grille TGT
WA 300 R S4 / WA 300 AR S4
Up to 30 parking spaces,
max. 100 door cycles* per day
Max. 20 door cycles* per hour
Max. door width 6000 mm
Max. door height 2400 mm

* The information refers to the max. passage height. One door cycle consists of one Open / Close phase.





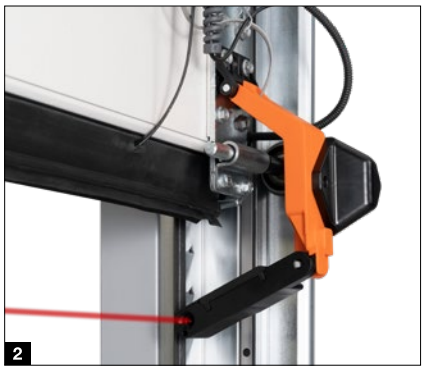

WA 500

230 V 1-phase current

- Can be combined with controls 545, 560
- Maintenance release 1 directly on the operator with the option of retrofitting with a secured release
- Optional leading photocell 2 for maximum security according to DIN 12453
- Standby under 2 W[1)]

400 V 3-phase current

- Can be combined with controls 545, 560
- Emergency / maintenance release 1 directly on the operator with the option of retrofitting with a secured release
- Optional leading photocell 2 for maximum security according to DIN 12453
- Standby under 2 W[1)]
- Exceptionally smooth running

[1)] Power consumption in energy-saving mode without any connected accessories

0.3 m/s opening speed

Door types / application areas

industrial sectional door
230 V 1-phase current
Up to 100 parking spaces
Max. 250 door cycles [1)] per day
Max. 12 door cycles [1, 2)] per hour
Max. door width 4500 mm [3)]
Max. door height 4500 mm [3)]

400 V 3-phase current
Up to 100 parking spaces
Max. 300 door cycles [1)] per day
Max. 15 door cycles [1, 2)] per hour
Max. door width 10000 mm [3)]
Max. door height 7500 mm [3)]

[1)] One door cycle consists of one Open / Close phase
[2)] At a maximum ambient temperature of +40°C, an additional 5 door cycles per hour are possible
[3)] The information refers to the max. passage height and width

Operator systems

Shaft operators

Only from Hörmann

Constant door travel speed
even with track application H and V





1

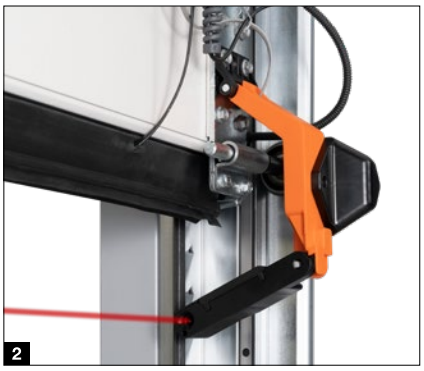

2

WA 500 FU

230 V 1-phase current

- Soft start and soft stop for gentle door travel
- Can be combined with controls 545, 560
- Constant door travel speed also with track applications H and V **.EUROPEAN PATENT**
- Emergency / maintenance release 1 directly on the operator with the option of retrofitting with a secured release
- Optional leading photocell 2 for maximum security according to DIN 12453
- Standby under 2 W[1)]
- Exceptionally smooth running

[1)] Power consumption in energy-saving mode without any connected accessories

Door types / application areas

Industrial sectional door
230 V 1-phase current
Up to 100 parking spaces,
max. 450 door cycles [1)] per day
Max. 25 door cycles [1), 2)] per hour
Max. door width 10000 mm
Max. door height 7500 mm

[1)] One door cycle consists of one Open / Close phase
[2)] At a maximum ambient temperature of +40°C, an additional 5 door cycles per hour are possible
[3)] The information refers to the max. passage height and width

1.0 m/s opening speed
With chain box and control 560

Controls

Compatible system solutions









	Internal control 300	External control 360	Control 545	Control 560
Operators	WA 300 S4 / WA 300 R S4 / WA 300 AR S4	SupraMatic HT / WA 300 S4 / WA 300 R S4 / WA 300 AR S4	WA 500, WA 500 FU, ITO 500 FU	
Functions / features				
Control and operator can be fitted separately		●	●	●
Illuminated keypad				●
Smart installation with BlueControl app via Bluetooth as standard			●	●
Adjustment work can be conveniently done directly on the control		●	●	●
Soft start and soft stop	●	●	●[10]	●[10]
Adjustable high-speed opening and closing (depending on track application)	●[1]	●[1]	●	●
Power limit in OPEN / CLOSE directions	●[2]	●[2]	●[10]	●[10]
Integrated Open / Stop / Close operation	●	●	●	●
Second opening height	○[3]	●	●[11]	●
7-segment display with menu reading from outside (maintenance, cycle and operating hours counter as well as fault analysis)		Double	Quadruple	Quadruple
Extension possible with external radio receiver	●	●	●	●
Query of the gate position	○[4]	○ 5]	○[6]	○[6]
2 timers for programming scenarios in 2 different periods of time				●
Option relay as standard		●		●
HCP bus interface for intelligent accessories			●	●
Automatic timer [7]	●	●	●	●
Traffic control[7]		○		○
Connecting terminals for additional command units	●	●	●	●
Power supply	230 V	230 V	400 / 230 V [12]	400 / 230 V [12]
Connection cable with CEE plug [8] (IP 44)	●	●	●	●
Main switch integrated into control housing	○[9]	○	○	○
Energy-saving function			●	●
Protection class IP 65 (jet-water protected) for control unit and door leaf components	●	●	●	●

● = As standard
○ = With corresponding equipment with additional control, if applicable

[1] In the CLOSE direction during operation without SKS / VL (during operation with SKS / VL, the door generally travels at high speed in the CLOSE direction)
[2] In accordance with EN 12453
[3] Possible in combination with UAP 1-300 and DTH-I or DTH-IM
[4] In combination with ESE BS, HS 5 BS
[5] In combination with HET-E2 24 BS, HS 5 BS and end-of-travel position feedback
[6] With ESE BS HCP
[7] Only in combination with an activating kit for warning lights and photocell, light grille or leading photocell VL1-LE / VL2-LE
[8] For controls with integrated main switch the connection cable is omitted
[9] External main switch possible or via control panel 300 U with integrated main switch
[10] Only with WA 500 FU and ITO 500 FU
[11] Only a connection option in the control; no additional button in the control cover
[12] FU operators are only available with a 230 V connecting voltage

Accessories

Hand transmitter, radio switch, receiver

BiSecur





HS 5 BS
4 button functions plus query button, high-gloss surface black or white



HS 5 BS
4 button functions, plus query button, textured surface matt black



HS 4 BS
4 button functions, textured surface matt black



HS 1 BS
1 button function, textured surface matt black



HSE 1 BS
1 button function, including eyelet for key ring, textured surface matt black



HSE 4 BS
4 button functions, incl. eyelet for key ring, textured surface matt black with chrome or plastic caps



4-button security hand transmitter HSS 4 BS
Additional function: Copy protection for hand transmitter coding, with chrome caps

BiSecur

Only from Hörmann

Modern radio system

The bi-directional BiSecur radio system is based on future-oriented technology for the convenient and secure operation of industrial doors. The extremely secure BiSecur encryption protocol makes sure that no one can copy your radio signal. It was tested and certified by security experts at Bochum university.

Your advantages

- 128-bit encryption with the same high security level as online banking
- Interference-resistant radio signal with a stable range
- Convenient querying of the door position*
- Backwards compatible, i.e. radio receivers with the frequency 868 MHz (2005 to June 2012) can also be operated with BiSecur control elements

* for WA 300 S4 with optional bidirectional receiver ESEi BS, for all other operators with optional bidirectional receiver HET-E2 24 BS and feedback of the end-of-travel positions



Radio code switch
FCT 3 BS
3 functions, with illuminated buttons, recessed or surface-mounted fitting possible, plastic housing in Light grey RAL 7040 (also available with 10 functions and hinged cover, painted in White aluminium RAL 9006)



Radio code switch
FCT 10 BS
10 functions, with illuminated buttons and hinged cover, recessed or surface-mounted fitting possible, plastic housing painted in RAL 9006 White aluminium



Radio finger-scan
FFL 25 BS
2 functions and up to 25 fingerprints, with hinged cover, recessed and surface-mounted fitting possible, plastic housing painted in RAL 9006 White aluminium



Radio radar button FSR 1 BS
Sensor for non-contact opening, plastic housing, IP 41, for recessed or surface-mounted fitting

Radar button HTR 1-230 / 1 – 24
Wired version with 230 V or 24 V



Industrial hand transmitter
HSI 3 BS, HSI 6 BS, HSI 15 BS
for the control of up to 3 gates (HSI 3 BS), 6 gates (HSI 6 BS) or 15 buttons (HSI 15 BS), with extra large buttons for easier operation with operation with work gloves, shock-resistant housing; protection category: IP 65



Industrial hand transmitter
HSI BS
For control of up to 1000 gates, with display and extra-large speed dialling buttons for easier operation with work gloves, transfer of hand-held transmitter codes to other devices possible, connection to external power supply via optional connection cable



3-channel receiver
HEI 3 BS
For controlling 3 functions

Bi-directional receiver
ESEi BS
For querying the door position



1-channel relay receiver
HER 1 BS
1 volt-free relay output with status query



2-channel relay receiver
HER 2 BS
2 potential-free relay outputs with status query and external antenna



2-channel relay receiver
HET-E2 24 BS
2 volt-free relay outputs for choosing the direction, one 2-pin input for volt-free OPEN / CLOSE limit switch reporting (for querying the door position)



4-channel relay receiver
HER 4 BS
4 volt-free relay outputs with status query

Accessories

Button



Push button DTH-R
Separate control of both running directions; separate stop button

Dimensions:
90 × 160 × 55 mm (W × H × D)
protection category: IP 65



Push button DTH-RM
Separate control of both running directions; separate stop button, with miniature lock:
Operation of the operator is deactivated – moving the operator is no longer possible; 2 keys included in the scope of delivery

Dimensions:
90 × 160 × 55 mm (W × H × D)
Protection category: IP 65



Push button DTH-I
For moving the door to the OPEN / CLOSE positions; separate stop button for interrupting door travel; 1/2-open button for opening the door to the programmed intermediate travel limit, protection category: IP 65,

Dimensions:
90 × 160 × 55 mm (W × H × D)

Note:
With integrated control WA 300 S4, only in combination with UAP 1-300, not for control 545.



DTH-IM push button
For moving the door to the OPEN / CLOSE positions; separate stop button for interrupting door travel; 1/2-open button for opening the door to the programmed intermediate end position, with miniature lock: operation of the operator is deactivated, it is no longer possible to move the operator; 2 keys included in the scope of delivery

Dimensions:
90 × 160 × 55 mm (W × H × D)
protection category: IP 65

Note:
With integrated control WA 300 S4, only in combination with UAP 1-300, not for control 545.



Push button DT 02
Opening or closing via a command button, separate stop button

Dimensions:
75 × 145 × 70 mm (W × H × D),
protection category: IP 66



Push button DT 03
Separate control of both running directions; separate stop button

Dimensions:
75 × 180 × 70 mm (W × H × D),
protection category: IP 66



Push button DT 04
Separate control of both running directions; separate stop button; partial opening (separate button)

Dimensions:
75 × 225 × 70 mm (W × H × D),
protection category: IP 66

Note:
With integrated control WA 300 S4, only in combination with UAP 1-300, not for control 545.



Push button DTN A 30
For separate control of both operational directions; stop button is a push-to-lock button which, once pressed, stays depressed in order to prevent unauthorised operation; subsequent actuation is then only possible through unlocking with a key (2 keys included in the scope of delivery)

Dimensions:
75 × 180 × 105 mm (W × H × D),
protection category: IP 66



Push button DTP 02
Opening or closing via a command button, separate stop button, operation control light for control voltage, lockable with profile half cylinder (available as an accessory),

Dimensions:
77 × 235 × 70 mm (W × H × D),
Protection category: IP 44



Push button DTP 03
For separate control of both operational directions, separate stop button, operation control light for control voltage, lockable with profile half cylinder (available as an accessory),

Dimensions:
77 × 270 × 70 mm (W × H × D),
Protection category: IP 44



Emergency stop switch DTN 10
Fast immobilisation of the door system; push-to-lock button (mushroom button); surface-mounted,

Dimensions:
93 × 93 × 95 mm (W × H × D),
protection category: IP 65



Emergency stop switch DTNG 10
Quick immobilisation of the door system; push-to-lock mushroom button; surface-mounted

Dimensions:
93 × 93 × 95 mm (W × H × D),
protection category: IP 65

Note:
The lockable function serves to isolate the control voltage and immobilises the command units. Profile half cylinders are not included in the scope of delivery for the push buttons.



Key switch ESU 30
With 3 keys, recessed version, Impulse or OPEN-CLOSE functions can be selected;

Dimensions of the switch box:
60 mm (d), 58 mm (D),
Panel dimensions:
90 × 100 mm (W × H),
Recess in the brickwork:
65 mm (d), 60 mm (D);
Protection category: IP 54

Surface-mounted version ESA 30
(without illustration)
Dimensions:
73 × 73 × 50 mm (W × H × D)



Key switch STAP 50
With 3 keys, surface-mounted version;

Dimensions:
80 × 80 × 63 mm (W × H × D);
protection category: IP 65

Key switch STUP 50
with 3 keys, recessed version (not shown),

Dimensions: 80 × 80 mm (W × H);
protection category: IP 54



Pull switch ZT 2 with cord
Impulse transmission to open or close the door;

Dimensions:
60 × 90 × 55 mm (W × H × D);
Length of the pull cord: 3.2 m;
protection category: IP 65

Cantilever arm KA1 (not shown)
Projection 1680 – 3080 mm
can be used with ZT 2



Widescan
High-end motion detector and monitoring system using laser technology, ensuring operational safety, even with different floor coverings

Accessories

Receivers, gateways



Bluetooth receiver HET-BLE
For operation, impulse sequence control of industrial sectional doors via the Hörmann BlueSecur app

Dimensions:
110 × 45 × 40 mm (W × H × D)



UAP 1-300
For WA 300 S4; impulse selection, partial opening function, limit switch reporting and activating kit for warning lights with 2 m system cable

Dimensions:
150 × 70 × 52 mm (W × H × D); switching capacity max.: 30 V DC / 2.5 A (resistive load), 250 V AC / 500 W (resistive load);
Protection category: IP 65



HOR 1-300
For WA 250 R S4, WA 300 R S4 or control 300 to control limit switch reporting or warning lights with 2 m connecting lead; optionally available for fitting in push button control 300 U (not shown)

Dimensions: 110 × 45 × 40 mm (W × H × D);
Switching capacity max.: 30 V DC / 2.5 A (resistive load),
250 V AC / 500 W (resistive load);
Protection category: IP 44



Loxone gateway (Hörmann Air)
for control units 545, 560
for controlling Hörmann operators and control units via the Loxone Smart Home System



KNX gateway
For controls 545, 560
To control Hörmann operators and controls via the KNX building automation



WiFi gateway
For controls 545, 560 (incl. HCP adapter), WA 300 S4 integrated control, SupraMatic HT to control Hörmann operators and controls via Apple Home, Amazon Alexa or Google Home / Google Assistant.



Homematic IP gateway
for WA 300 S4 integrated control unit, SupraMatic HT for controlling Hörmann operators via the Homematic IP Smart Home System



DeltaDore gateway (X3D Gateway)
for WA 300 S4 integrated control unit, SupraMatic HT for controlling Hörmann operators via the DeltaDore Tydom Smart Home System



GSM Control
For control units 360, 445R, 460R, 545, 560 for opening the system by phone call and receiving status or fault messages via SMS

Accessories

Cameras, control housing



HCAM Basic camera
The HCAM Basic is a low-cost, user-friendly camera for recognising and managing vehicle number plates with a reading range of 1 to 6 metres.



HCAM Dome camera
Thanks to its powerful zoom function, the HCAM Dome camera captures vehicle license plates within a reading range of 1 to 16 meters. Its adjustable optics and robust housing make it the ideal solution for complex fitting situations.



HCAM Smart camera
The HCAM Smart uses the latest technologies and neural networks to capture vehicle license plates quickly and reliably. The camera has a reading range of 1 to 16 meters.

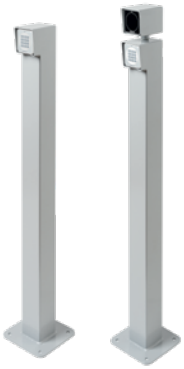

Posts
With screw base for fitting on the floor, surface in RAL 9006 White aluminium, tube 90 × 90 mm, also available as concreting version

Post STN 1
To hold 1 command unit on the surface, height 1050 mm

Post STN 1-1
To hold 2 command units or 1 command unit and 1 warning light, height 1200 mm

For command units:
CTR 1b-1, CTR 3b-1, CTV 3-1, CTP 3-1, TTR 1000-1, FL 150, STUP 50, LED double warning lights red / green



Control housing KGG
Perimeter protection via ID medium at the entry / exit, for up to 2 command units, optional preparation for intercom

Dimensions:
300 × 1100 × 260 mm (W × H × D)

For command units:
Transponder reader, QR code reader, code switch



Control housing KGU
Perimeter protection via ID medium at the entry / exit, for up to 3 command units, with preparation for intercom

Dimensions:
425 × 1205 × 410 mm (W × H × D)

For command units:
On-site intercom, on-site reader, transponder reader, QR code reader, code switch



Control housing car / lorry
Perimeter protection via ID medium at the entry / exit, higher housing for operation by lorry drivers for up to (2 ×) 3 command units, with preparation for intercom

Dimensions:
395 × 2060 × 380 mm (W × H × D),

For command units:
On-site intercom, on-site reader, transponder reader, QR code reader, code switch

Accessories

Buttons, detectors, activating kits, LED traffic lights



Code switch CTR 1b-1, CTR 3b-1
For 1 (CTR 1b-1) or 3 (CTR 3b-1) functions, with illuminated buttons

Dimensions:
80 × 80 × 15 mm (W × H × D)



Code switch CTV 3-1
For 3 functions, with particularly robust metal keypad

Dimensions:
80 × 80 × 15 mm (W × H × D)



Code switch CTP 3
For 3 functions, with illuminated lettering and touch-sensitive surface

Dimensions:
80 × 80 × 15 mm (W × H × D)



Decoder housing
For code switches CTR 1b-1, CTR 3b-1, CTV 3-1, CTP 3

Dimensions:
140 × 130 × 50 mm (W × H × D), switching capacity: 2.5 A / 30 V DC 500 W / 250 V AC



Finger-scan FL 150
For 2 functions, up to 150 fingerprints can be saved

Dimensions:
80 × 80 × 13 mm (W × H × D);
Decoder housing:
70 × 275 × 50 mm (W × H × D);
Switching capacity: 2.0 A / 30 V DC



Radar movement detector RBM 2
For OPEN impulse with directional recognition, max. fitting height: 6 m; optional remote control for radar movement detector

Dimensions:
155 × 132 × 58 mm (W × H × D);
Contact load:
24 AC / DC, 1 A (resistive load);
Protection category: IP 65



Transponder key switch TTR 1000-1
For 1 function via transponder key or transponder card, up to 1000 keys or cards can be saved

Dimensions: 80 × 80 × 15 mm (W × H × D);
Decoder housing: 140 × 130 × 50 mm (W × H × D);
switching capacity: 2.5 A / 30 V DC;
500 W / 250 V AC



Multi-function circuit board to be fitted in an existing housing or optionally in a separate extension housing (shown)
Limit switch reporting, momentary impulse, collective malfunction signalling, extension unit for controls

Extension housing with quick-release fastener
Dimensions: 202 × 164 × 130 mm (W × H × D);
Protection category: IP 65

A circuit board can be optionally mounted in the control.



Digital weekly timer in a separate additional housing
Switching command units on or off via a potential-free contact; extension unit for controls (for installation in existing housing); switching capacity: 230 V AC 2.5 A / 500 W, can be switched over to summer / winter time, manual switching: automatic operation, switching pre-selection permanently ON / OFF

Extension housing with quick-release fastener
Dimensions: 202 × 164 × 130 mm (W × H × D);
Protection category: IP 65



Summer / winter activating kit in additional housing
Function for full door opening and individually programmable intermediate travel limit, extension unit for controls

Extension housing with quick-release fastener
Dimensions: 202 × 164 × 130 mm (W × H × D);
Protection category: IP 65



1-channel induction loop, 24 V
in a separate additional housing
Suitable for one induction loop, induction loop detector with a normally open contact and a change-over contact

2-channel induction loop, 24 V
in a separate additional housing
Suitable for two separate induction loops; induction loop detector with two potential-free make contacts; direction detection possible

Extension housing with quick-release fastener
Dimensions: 202 × 164 × 130 mm (W × H × D); switching capacity: max. 2 A, 125 VA / 60 W; supplied without loop cable

Loop cable for induction loop: 50 m roll, cable designation: SIAF, cross-section: 1.5 mm², colour: brown

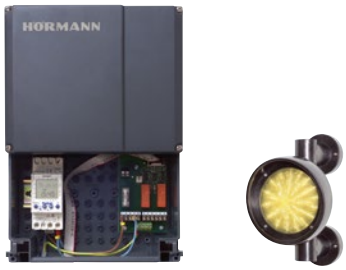

Activating kit for warning lights for fitting
in an existing housing or optionally
in a separate extension housing (shown)
Incl. 2 LED traffic lights TL40S ye; extension unit for control, with activating kit for warning lights as a visual indicator during door travel (optional weekly timer); applications: approach warning, automatic timer

After the set hold-open phase has elapsed (0 – 480 s), the warning lights flash during the set pre-warning time (0 – 70 s).

Extension housing with quick-release fastener
Dimensions: 202 × 164 × 130 mm (W × H × D),
Contact load: 250 V AC; 2.5 A / 500 W;
Protection category: IP 65



Traffic control in separate additional housing or for installation in existing housing (only for 360, 560 control units)
Incl. 2 LED traffic lights TL40S rd / gn or 2 LED traffic lights TL40S rd / ye* / gn; extension unit for control, with activating kit for warning lights as a visual indicator for regulating the entrance and exit (optional weekly timer);
Green phase time: adjustable 0 – 480 s, clearance phase time: adjustable 0 – 70 s

Extension housing with quick-release fastener
Dimensions: 202 × 164 × 130 mm (W × H × D),
Contact load: 250 V AC; 2.5 A / 500 W;
Protection category: IP 65

* Yellow is not required for traffic control



LED traffic light
TL40S rd
1-flame red,
Supply voltage 100 – 240 V AC / 50 – 60 Hz
Nominal power approx. 2 W
Protection category: IP 65

Dimensions:
180 × 250 × 290 mm
(W × H × D)



LED traffic light
TL40S ye
1-flame yellow,
Supply voltage 100 – 240 V AC / 50 – 60 Hz
Nominal power approx. 2 W
Protection category: IP 65

Dimensions:
180 × 250 × 290 mm
(W × H × D)



LED traffic light
TL40S gn
1-flame green,
Supply voltage 100 – 240 V AC / 50 – 60 Hz
Nominal power approx. 2 W
Protection category: IP 65

Dimensions:
180 × 250 × 290 mm
(W × H × D)



LED traffic light
TL40S rd / gn
2-flame red / green,
Supply voltage 100 – 240 V AC / 50 – 60 Hz
Nominal power approx. 2 W
Protection category: IP 65

Dimensions:
180 × 467 × 290 mm
(W × H × D)



LED traffic light
TL40S rd / ye / gn
1-flame red/yellow/green,
Supply voltage 24 V DC
Nominal power approx. 2 W
Protection category: IP 65

Dimensions:
180 × 250 × 290 mm
(W × H × D)

Dimensions and technical manual

Non-protruding up-and-over door ET 500-3

Vertical view

Fitting behind the opening

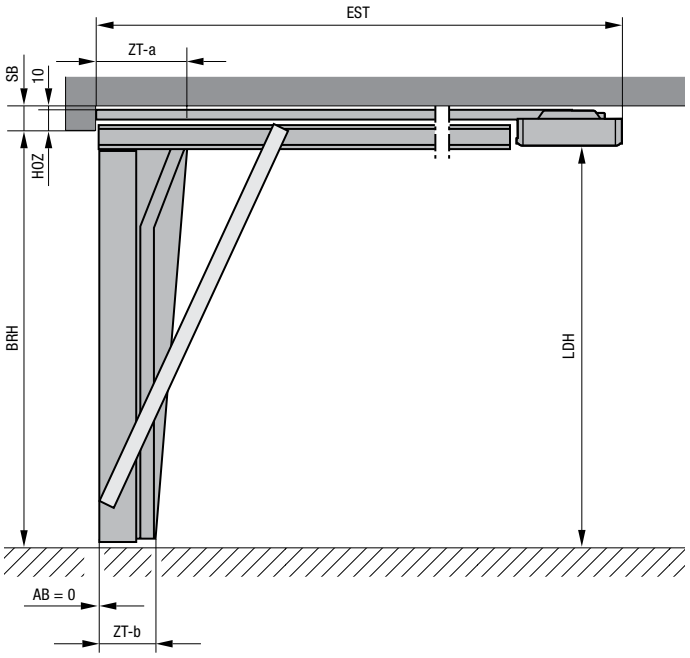

Horizontal view

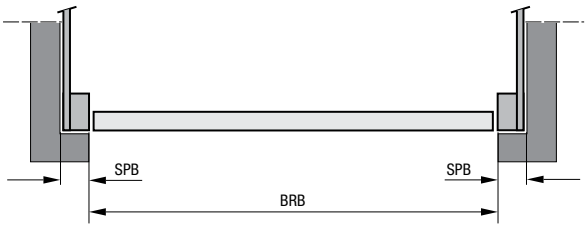

Explanations

SB	Required headroom
LH	Clear opening height
LB	Clear opening width
LDH	Clear passage height
LDB	Clear passage width
HOZ	Transom light frame height
AB	Swivelling range
SPB	Side space requirement
BRH	Nominal height (ordering size)
BRB	Nominal width (ordering size)
ZT	Frame depth

Distance back with operator (max.) EST

SupraMaticHT

BRH 2000 – 2200	3260
BRH 2205 – 2450	3510
BRH 2455 – 3000	4185

ITO 500 FU

BRH 2000 – 2650	3900
BRH 2655 – 3000	4900

Required headroom SB

SupraMatic HT / ITO 500 FU

For fitting with lintel: min. headroom	HOZ + 10

Clear opening height LH

BRH = LH	2000 – 3000

Clear passage height LDH

BRB < 6000	BRH – 40
With wicket door	BRH – 40

Side space requirement SPB (behind the opening)

ET 500	200

Clear opening width LB

BRB = LB	2250 – 6000

Swivelling range AB
with flush-fitting installation

ET 500	0

Frame depth ZT-a / ZT-b

ET 500	530 / 380

Notice
For further information, please see the technical manual or contact your Hörmann partner.

Dimensions in mm

Vertical view

Fitting behind the opening

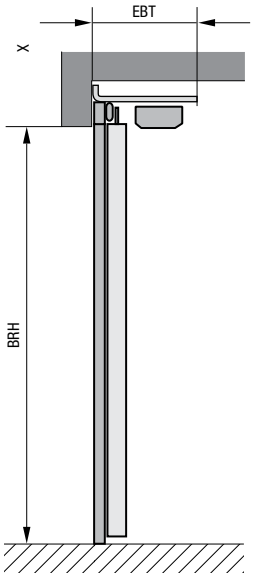

Horizontal view

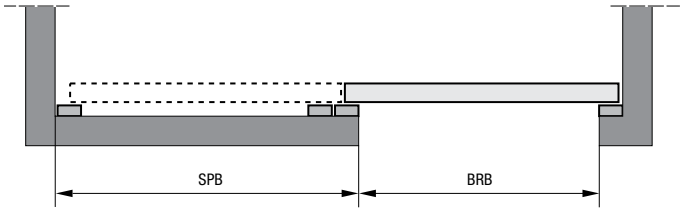

Explanations

EBT	Fitting depth
LH	Clear opening height
LB	Clear opening width
LDH	Clear passage height
LDB	Clear passage width
SPB	Side space requirement
BRH	Nominal height (ordering size)
BRB	Nominal width (ordering size)

Fitting depth EBT	Approx. 450
Nominal height BRH = LH	2000 – 3000
Side space requirement SPB	BRB + 310
Nominal size width BRB = LB	2250 – 6000
Clear passage height LDH LDH = BRH	
Clear passage width LDB (The clear passage may vary depending on the fitting situation)	BRB – 60

Notice
For further information, please see the technical manual or contact your Hörmann partner.

Dimensions in mm

Dimensions and technical manual

Rolling shutter / rolling grille TGT

Vertical view

Fitting behind the opening

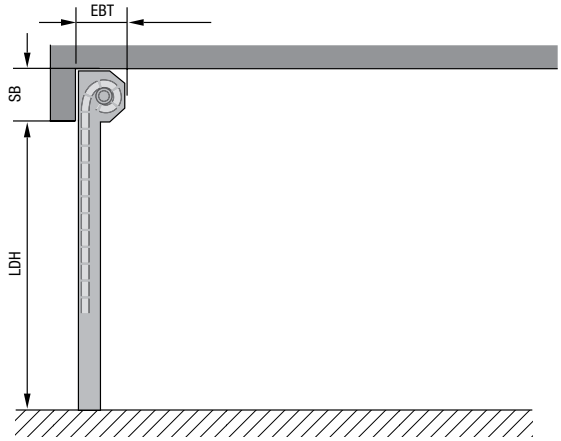

Horizontal view

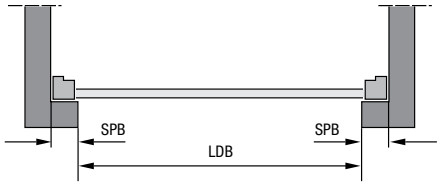

Explanations

LDB Clear passage width (ordering size)
LDH Clear passage height (ordering size)
EBT Fitting depth
SB Required headroom
SPB Side space requirement

Fitting depth EBT

Decotherm	370
With PVTGT	440
HG-L	370
With PVTGT	440

Required headroom SB for full passage height

Decotherm	
Door height 2400	365
Door height 2250	360
Door height 2000	355
With PVTGT	380
HG-L	
Door height 2400	335
Door height 2250	330
Door height 2000	325
With PVTGT	350

Side space requirement SPB 165

All dimensions also apply to fitting as an external rolling shutter.

Size range

Rolling shutter TGT	Max. width	5000
	Max. height	2400
Rolling grille TGT	Max. width	6000
	Max. height	2400

Dimensions in mm

Vertical view

Sectional door with track application N

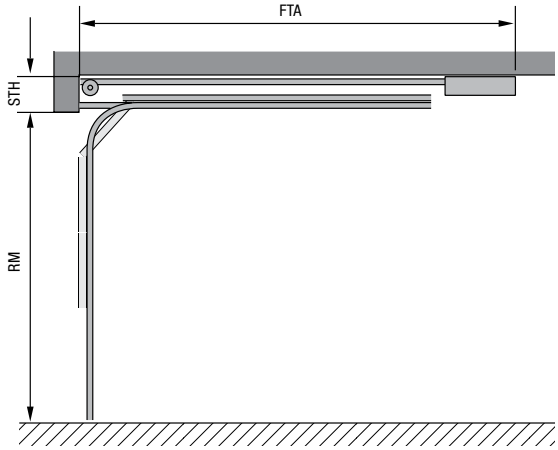

Vertical view

Sectional door with track application L

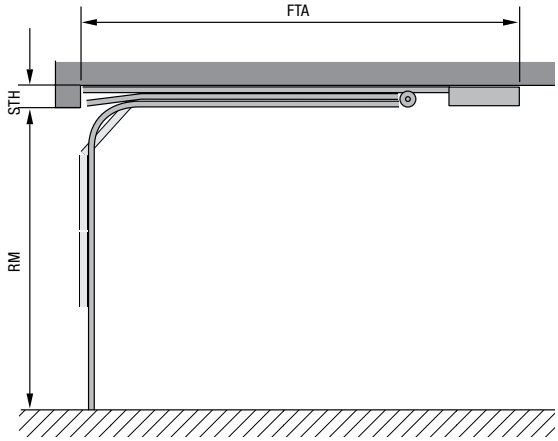

Horizontal view

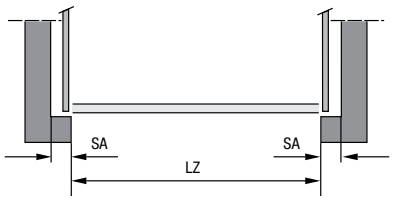

Size range

Max. width	8000
Max. height	3000

Explanations

LDB	Clear passage width
LDH	Clear passage height
FTA	Clearance for door operator (distance back + clearance)
STH	Min. headroom
SA	Sideroom
LZ	Clear frame dimensions (ordering size)
RM	Grid height (ordering size)

Clear passage height LDH
With chain hoist or WA 500 / 500 FU

Track application N	
LZ ≤ 5500	RM
LZ > 5500	RM – 50
Track application L with swivel mechanism	
LZ ≤ 5500	RM – 50
LZ > 5500	RM – 100
Track application L without swivel mechanism	
LZ ≤ 5500	RM – 110
LZ > 5500	RM – 160
ITO 500 FU / SupraMatic	
LZ > 5500	RM – 50 (only available without swivelling roller)

Clearance for door operator

SupraMaticHT	
Track application N	
K boom – RM ≤ 2125	3215
M boom – RM ≤ 2375	3465
L boom – RM ≤ 3000	4140
XL boom – RM ≤ 2125	4390
Track application L	
M boom – RM ≤ 2125	3465
L boom – RM ≤ 2750	4140
XL boom – RM ≤ 3000	4390
ITO 500 FU	
Track application N	
RM ≤ 2500	3865
RM ≤ 3500	4865
RM ≤ 4500	5865
Track application L	
RM ≤ 2400	3865
RM ≤ 3400	4865
RM ≤ 4400	5865

Min. headroom STH

SupraMaticHT	
Track application N	≥ 390
Track application L	260
ITO 500 FU	
Track application N	≥ 425
Track application L	260
WA 300	
Track application L	210
WA 500 / WA 500 FU	
Track application N	≥ 390

Sideroom SA

Track application N/L	> 125
WA 300 (more space is required on the operator side)	
Track application N	≥ 260
Track application L	≥ 290
WA 500 / 500 FU (more space is required on the operator side)	
Track application N	≥ 280
Track application L	≥ 200

Dimensions in mm

Dimensions and technical manual

Up-and-over door N 80, N 500

Vertical view

Fitting behind the opening

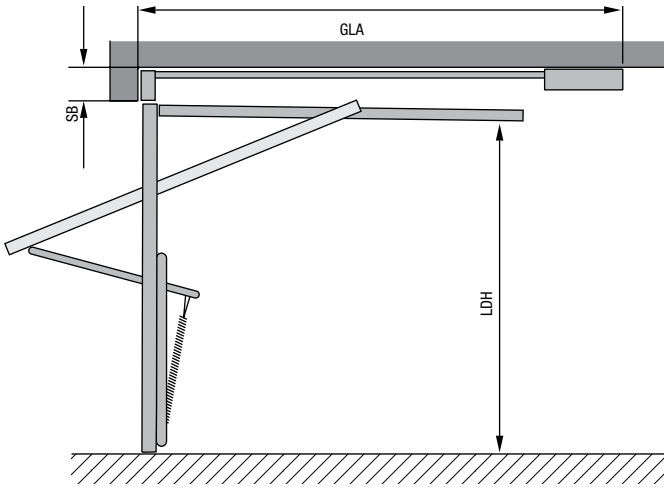

Horizontal view

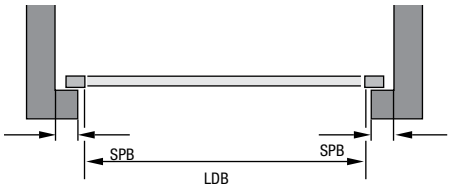

Size range

Max. width	5000
Max. height	2750

Explanations

BMB	Ordering size width
BMH	Ordering size height
BRB	Nominal size width
BRH	Nominal height
EBB	Fitting area width
EBH	Fitting area height
GIM	Inside garage dimension
LB	Clear width
LH	Clear height
LDB	Clear passage width
LDH	Clear passage height
RAMB	Overall frame dimension width
RAMH	Overall frame dimension height
W	Total distance back of operator boom including operator head
GLA	Distance back with operator
SB	Required headroom
SPB	Side space requirement
OFF	Finished floor level (FFL)
AUSS	Exterior

Up-and-over door N 80

Clear passage width LDB	BRB – 140
Clear passage height LDH	BRH – 90
Distance back with operator GLA	
BRH < 2500	3200
BRH < 2750	3450
Required headroom SB	> 50
Side space requirement SPB	> 60

Dimensions in mm

Vertical view

Fitting behind the opening

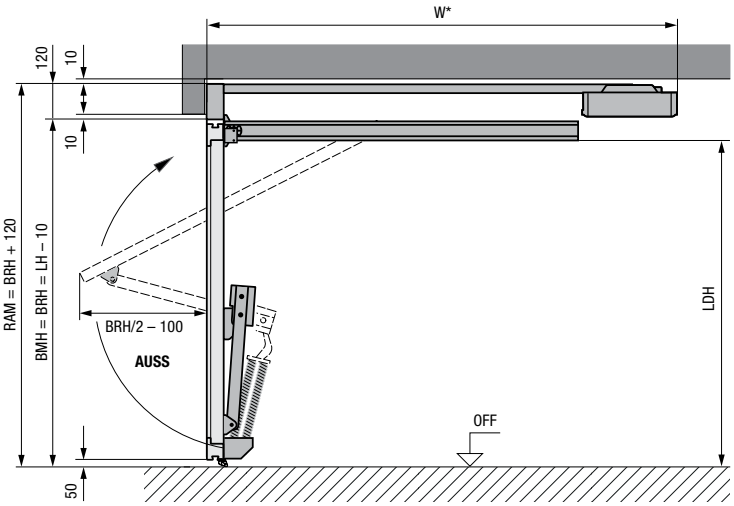

Horizontal view

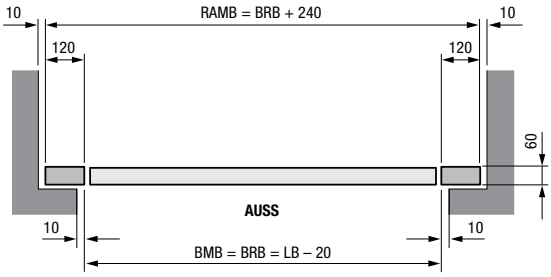

Size range

Max. width	5000
Max. height	2750

Explanations

BMB	Ordering size width
BMH	Ordering size height
BRB	Nominal size width
BRH	Nominal height
EBB	Fitting area width
EBH	Fitting area height
GIM	Inside garage dimension
LB	Clear width
LH	Clear height
LDB	Clear passage width
LDH	Clear passage height
RAMB	Overall frame dimension width
RAMH	Overall frame dimension height
W	Total distance back of operator boom including operator head
GLA	Distance back with operator
SB	Required headroom
SPB	Side space requirement
OFF	Finished floor level (FFL)
AUSS	Exterior

Up-and-over door N 500

Clear passage height LDH	
LDH < 3995	BRH – 130
LDH > 4000	BRH – 170

Distance back with operator W	
BRH < 2500	3200
BRH < 2750	3450

Dimensions in mm

Hörmann.
For Life.

Thanks to their superior quality, Hörmann products ensure that residential and industrial buildings as well as construction projects function sustainably, reliably and economically. They are a crucial part of your building – and will remain so over the long term.

INDUSTRIAL DOORS. LOADING TECHNOLOGY. SLIDING DOORS. CONSTRUCTION PROJECT DOORS. PERIMETER PROTECTION SYSTEMS.









Some of the products shown feature special equipment and do not always correspond to the standard versions. The surface finishes and colours shown are subject to the limitations of the printing process and cannot be regarded as binding. All RAL colours are based on the RAL colour chart. All rights reserved. No part may be reproduced without our prior permission. Subject to changes.

Status 04.2026 / Printed 10.2026 / HF 85815 EN / SAP 361276 / PDF / Printed on 100% recycled paper

HÖRMANN