

SERIES 2000 GARAGE DOORS

Superior design, engineering excellence

HÖRMANN









Content

4 Good reasons to try Hörmann

16 Technology, equipment, accessories

16 Overview of Hörmann Series 2000

18 Overview of manual release and glazings

19 Overview of colour and surface finishes

20 Retractable door

22 Canopy door

24 Operators

26 Accessories

28 Fitting details

Please note

Some of the doors shown are equipped with optional extras and do not always correspond to our standard models. The surface finishes and colours shown are subject to the limitations of the printing process and cannot be regarded as binding.

All rights reserved. No part may be reproduced without our prior permission.
Subject to changes.

The complete warranty conditions can be found at www.hormann.co.uk

LEFT SITE. Panel 2004 Georgian

Responsibility for generations

The Hörmann family business has over 90 years of experience as a construction component specialist. This gives us an obligation to both current and future generations. That's why environmental responsibility plays such an important role for us. To this end, we develop products and processes that conserve resources and reduce emissions.



“A GOOD REPUTATION MUST BE EARNED.”

August Hörmann

In keeping with the tradition started by the company’s founder, the Hörmann brand is a true promise of quality and, with sales of over 20 million doors, door frames and operators, is one of Europe’s most successful suppliers. Due to the comprehensive international sales and service network, Hörmann is your strong partner for high-quality construction components.



REDUCING EMISSIONS, CONSERVING RESOURCES. As a family business, we are very conscious of our responsibility to future generations. Hörmann’s sustainability strategy aims to reduce and avoid greenhouse gas emissions. To ensure we have a valid data set, we calculate our company’s carbon footprint every year. We meet 100% of our electrical power needs at all our European production sites using green electricity sourced from renewable sources. Through a range of measures, we are reducing our emissions and thereby saving more than 75000 tonnes of CO_2 each year. In addition, we provide support for climate protection projects and thereby perform CO_2 offsetting. Currently, for example, we offset more than 550000 tonnes of CO_2 per year. This corresponds to the emissions generated by the procurement, production and distribution of Hörmann products for residential construction. We offer our customers the opportunity to play an active part: if they wish, when buying our products for commercial and industrial construction, they can also make a contribution to climate protection projects.

ClimatePartner certified product
climate-id.com/XNEBKC

ClimatePartner certified product
climate-id.com/FYZNUF

Brand quality made in Europe

The family-owned company Hörmann offers all important construction components for building and renovating projects from a single source. We manufacture in highly specialised factories using state-of-the-art production technologies. Our employees work intensively on new products, continual further developments and improvements to details. The results are patents and unique products on the market.











10-year warranty*

LONG-LASTING. GUARANTEED. All major door and operator components are developed and manufactured by Hörmann. Endurance tests under real conditions ensure mature series products with Hörmann quality. Thanks to this and uncompromising quality assurance, you receive a 10-year warranty on all Hörmann Series 2000 doors and a 5-year warranty on Hörmann operators*.

* The complete warranty conditions can be found at www.hormann.co.uk

Tested and certified

CERTIFIED SAFETY FOR YOU AND YOUR FAMILY. Hörmann Series 2000 doors are tested and certified in accordance with the high safety requirements of European standard 13241, not only on their own but also in combination with Hörmann operators. It would be hard to find a safer up-and-over door. This provides you and your family with safety during daily use.



Hörmann Series 2000 steel up-and-over doors

Series 2000 steel doors are timeless in appearance, never ageing your property. Whether choosing one of the ribbed or panelled designs, they offer a quiet elegance blending in with any environment whilst giving a lasting prestige.
The doors are galvanised with a high-quality polyester powder-coating and come protected against adverse weather conditions and corrosion, maintaining the long term beauty of the door.



Style 2601 Elegance, Traffic white, RAL 9016



Style 2002 Horizontal, Traffic white, RAL 9016

Design your own door with the open-for-infill frame

Design your own door with a strong, fully welded frame that’s built to last. It comes pre-drilled and coated in a durable finish, available in brown or white. Clear, illustrated instructions and design suggestions make installation easy.



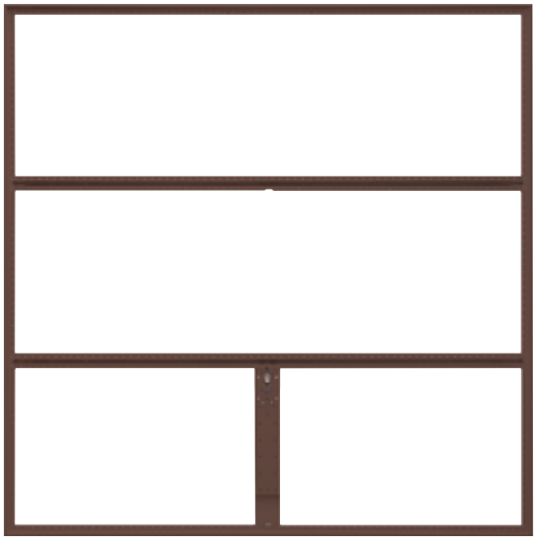

1

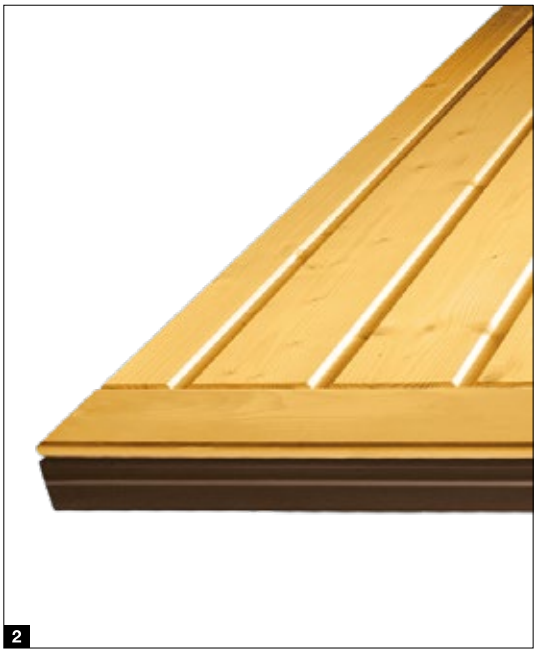

2



3

STYLE 2011. The Hörmann open-for-infill leaf frame is perfectly prepared to accept a timber infill of your own design 1.

- Extremely sturdy frame construction with reinforced struts. Fully welded!
- Min. infill weight: 6 kg per m^2, max. infill weight 10 kg per m^2.
- Fully galvanised, door leaf frame additionally with high-grade polyester primer coating Terra brown (RAL 8028) or Traffic white (RAL 9016).
- Frame and struts pre-drilled at 30 mm spacings.
- Illustrated fitting instructions with suggested designs.

With design 2011 open-for-infill, door widths of up to 5 m are possible (for any width over 4267 mm, please refer to your Hörmann dealer) if the permissible infill weight is complied with.

THIS DOOR CONSTRUCTION OFFERS YOU TWO DESIGN OPTIONS.

- Infill overlapping the frame, whereby the frame and bottom section are entirely concealed 2.
- Timber infill within the frame with visible bottom section to protect against spray water 3.

Optimal solutions for every fitting and renovation situation

Hörmann provides tailored solutions that seamlessly adapt to any installation or refurbishment scenario, ensuring both functionality and aesthetic appeal. Whether you‘re upgrading an existing space or fitting out a new one, Hörmann‘s products are designed to meet diverse architectural and technical requirements.



1



LEFT SITE. Out with the old – in with the new

MODERNISE AND ENHANCE 1 2. Benefit from the inexpensive standard sizes. Of course, we can also easily provide you with any required special solutions.

In addition, your Hörmann partner‘s all-inclusive package:

- Expert advice
- Measurements on site
- Professional installation
- Construction and environmentally sound disposal



COMPENSATION PANELS AND MODERNISATION PANELS. Should your garage opening be higher and wider than the inexpensive standard sized garage door, simply adjust the sides and the lintel with panels that match the door. If the brickwork is damaged while removing the old door, modernisation panels 3 ensure a clean result without the need for further plastering.



OPTIONAL RUBBER BOTTOM PROFILES. In garages without a threshold, a flexible, weather-resistant rubber bottom profile 4 helps keep out passing debris.



OPTIONAL RETRACTABLE PLUS 5. Still conforming to the EN 13241-1 this gear allows for a clear drive through passage wider than the standard retractable gear. This makes parking the car in the garage a lot more convenient.

Intelligent operating comfort

Control your garage door and entrance gate operators, door operators, entrance door locks, lights and other devices simply, safely and conveniently via hand transmitter, radio switch or smartphone. All operators, receivers and control elements with BiSecur radio technology are 100% compatible with each other.



BiSecur

Only from Hörmann

CERTIFIED SECURITY. The bidirectional radio system BiSecur with particularly secure encryption protocol and stable, interference-free range makes sure that no one can copy your radio signal. This is also confirmed by the security experts of Bochum University and independent test institutes.

➔ Take a look at the video on YouTube or at www.hoermann.com/en/media-centre

INTELLIGENT TECHNOLOGY. Hörmann operators offer more convenience, smart functions and intelligent technology. The automatic safety cut-out stops the door securely and reliably if it encounters an obstacle. Your door opens and closes quietly and smoothly with the soft start and soft stop. Our elegant hand transmitters allow you to open your door from your car, for example. Or you can simply use your smartphone as a door opener with the Hörmann BlueSecur app.

At the touch of a button, the colour of the LED on the HS 5 BS handheld transmitter shows you the door position. You no longer have to go outside in wind and weather to see if your garage door is closed.



Overview of Series 2000

Steel up-and-over door designs


1


2


3


4


5


6


7


8


9


10


11


12


13


14

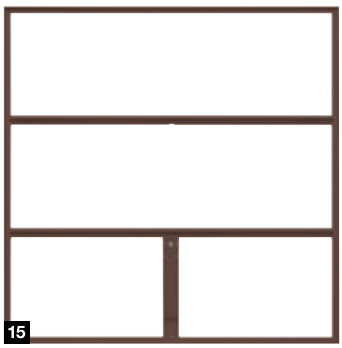
15


16


17


18

Side door styles

Side doors come with a profile cylinder lock and a black, synthetic lever/lever handle set as standard. They are optionally available in the same material choices as the garage door handles, please see page 18.

Matching side doors are available for all steel designs except 2101, 2103, 2504.

Doors

1. Style 2001 Vertical
   Traffic white, RAL 9016
2. Style 2002 Horizontal
   Traffic white, RAL 9016
3. Style 2601 Elegance
   Traffic white, RAL 9016 [1)]
4. Style 2602 Finesse
   Traffic white, RAL 9016 [1)]
5. Style 2103 Caxton
   only available in Traffic white, RAL 9016
6. Style 2101 Ilkley
   Traffic white, RAL 9016
7. Style 2004 Georgian
   Traffic white, RAL 9016
   also available in Decograin
8. Style 2304 Georgian with window
   Traffic white, RAL 9016
9. Style 2504 Countess
   only available Traffic white, RAL 9016
10. Style 2104 Marquess
    Traffic white, RAL 9016
    also available in Decograin
11. Horizontal Decograin
    Golden Oak
12. Vertical Decograin
    Rosewood
13. Georgian Decograin
    Golden Oak
14. Marquess Decograin
    Rosewood
15. Style 2011 Open-for-infill frame
    Terra brown, RAL 8028 [2)]

Side door styles

16. 2001 Vertical
17. 2004 Georgian
18. 2601 Elegance

[1)] also available in Anthracite grey RAL 7016
[2)] also available in Traffic white, RAL 9016

Please note:

Up and over garage doors are generally available from 6'6" (1981 mm) to 14'0" (4267 mm) in 6" (152 mm) increments. Intermediate sizes are available in some styles in the following widths: 6'10" (2083 mm), 7'3" (2210 mm), 7'5" (2261 mm) and 7'8" (2337 mm). Standard heights are 6'6" (1981 mm) and 7'0" (2134 mm). Additionally some styles only, are available in 6'4" (1930 mm), 7'6" (2286 mm) and 8'0" (2438 mm).

Please see Series 2000 Price List at www.hormann.co.uk for full availability and recommended structural opening sizes.

Please consult your Hörmann dealer for steel garage door styles that are available from STOCK in colours:
Anthracite grey RAL 7016, Jet black RAL 9005, Moss green RAL 6005 and Steel blue RAL 5011.

Overview of manual release and glazings

Steel up-and-over door

Manual release













Glazings



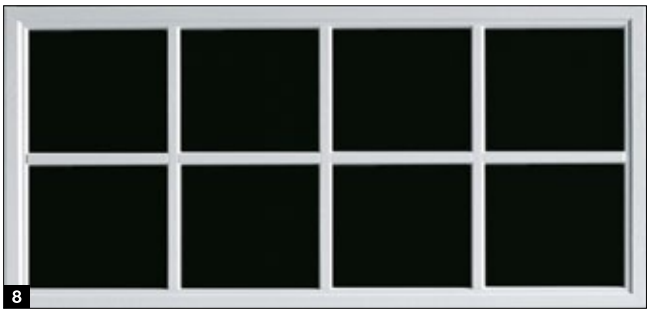







Manual release

- 1 Synthetic black, standard
- 2 Side door handle black, standard
- 3 Cast aluminium, white
- 4 Cast aluminium, silver finish
- 5 Brushed, stainless steel
- 6 Polished, stainless steel

Glazings

- 7 Ilkley, crystal
- 8 Ilkley, black
- 9 Georgian, plain
- 10 Georgian, diamond
- 11 Georgian, crossed

Please note:

All windows come with crystal panes. Frames come white as standard with colour options available.

Overview of colour and surface finishes

Steel up-and-over door

Colour options

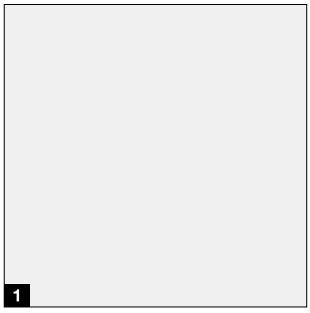



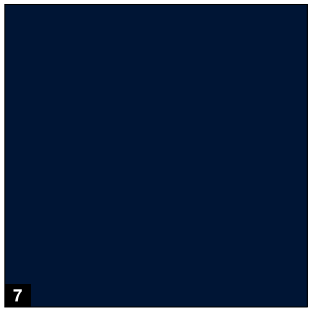



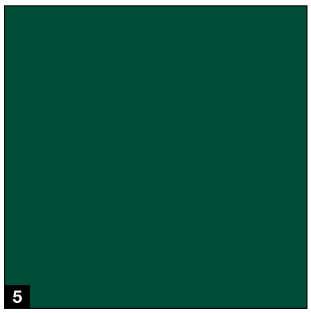

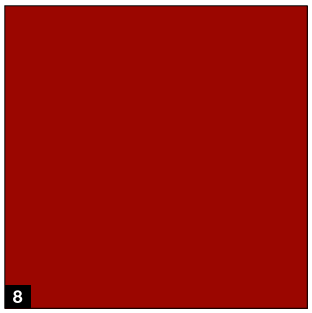

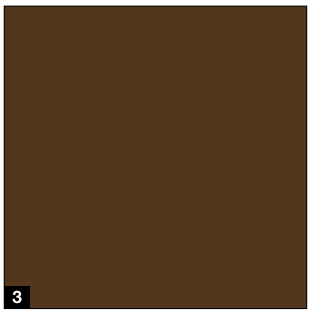

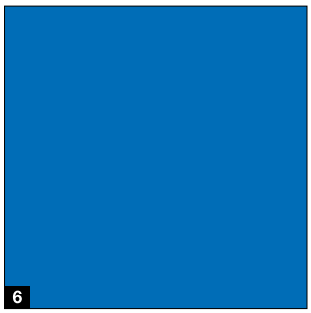

Surface designs

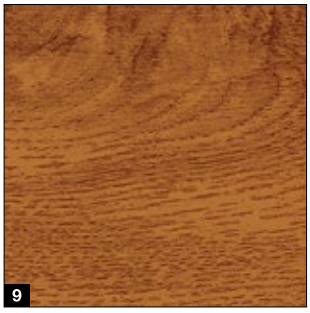



Colour options

- 1 RAL 9016 Traffic white
- 2 RAL 9005 Jet black
- 3 RAL 8028 Terra brown
- 4 RAL 7016 Anthracite grey
- 5 RAL 6005 Moss green
- 6 RAL 5005 Signal blue
- 7 RAL 5011 Steel blue
- 8 RAL 3003 Ruby red

Please note:

All our steel door designs come in Traffic white (RAL 9016) as standard, except for the open-for-infill frame which comes in Terra brown (RAL 8028).

Contact your Hörmann specialist dealer for advice regarding coloured doors.

Surface designs

- 9 Decograin Golden Oak
- 10 Decograin Rosewood

Retractable door

For single and double garage doors

Safety features to the latest European Standard 13241-1



1 Finger-trap protection
2 Track roller well
3 Spring system







Retractable door

- Retractable mechanisms are ideally suited to automatic operation.
- Single or double door version available.
- An optional 4 point locking kit is available. It comprises of steel locking bar rods and slam-shut latches to increase the number of locking points.
- Hörmann offers a steel fixing frame for all single and double retractable doors. This frame makes an on-site timber frame redundant and saves valuable installation time as it is quick and easy to fit.

Safety checklist for your old retractable up-and-over door

- ☐ Do flexible plastic strips on the frame and door leaf prevent trapped fingers? 1
- ☐ Is there a safety distance of 25 mm between the lifting arm and the frame? 1
- ☐ Does the bearing bracket have protective caps to prevent injury if inadvertently reached into? 1
- ☐ Is the door safely and securely guided as well as protected against uncontrolled movements? 2
- ☐ Are the tracks designed in such a way that it is impossible for the rollers to derail? 2
- ☐ After opening, does the door come to a safe stop? 2
- ☐ Is the door leaf safeguarded against crashing to the floor? 3
- ☐ Is it guaranteed that even if a spring should break, an imbalance no greater than 200 N is produced? 3
- ☐ Are the springs safeguarded to prevent them from being catapulted into the air? 3
- ☐ Is the spring system designed in such a way that there is no risk of trapped fingers? 3
- ☐ On power-operated up-and-over doors: are the maximum closing forces to EN 13241-1 complied with?

Even if you have answered only one of the above with “no”, your door is no longer safe.

Canopy door

For single doors

Safety features to the latest European Standard 13241-1



1 Cable drum
2 Internally guided cables
3 Anti-fall safeguard
4 Protective cover profiles







Canopy door

- Only Single door version available.
- An optional 4 point locking kit is available. It comprising steel locking bar rods and slam-shut latches to increase the number of locking points.
- Hörmann offers a steel fixing frame for all single and double retractable doors. This frame makes an on-site timber frame redundant and saves valuable installation time as it is quick and easy to fit.

Safety checklist for your old canopy up-and-over door

☐	Is the door safely and securely guided as well as protected against uncontrolled movements?	1
☐	Does your door have a cable drum with deep grooves to ensure the cable fits securely and prevents cables jumping?	1
☐	Are the door's cables internally guided?	2
☐	Is there an anti-fall safeguard fitted to your present door to prevent injury if a cable breaks?	3
☐	Are the tracks designed in such a way that it is impossible for the rollers to derail?	3
☐	After opening, does the door come to a safe stop?	3
☐	Do protective cover strips on the frame and the door leaf prevent trapped fingers?	4

Even if you have answered only one of the above with "no", your door is no longer safe.

Operators

SupraMatic 4

Supra-fast door opening and smart additional functions

- 40% faster opening speed* up to 20 cm/s
- Smart operation with the BlueSecur app
- Convenient garage ventilation
- Additional opening height
- Up to 3 times (SupraMatic E) or 5 times * (SupraMatic P) brighter LED lighting
- Extremely easy programming thanks to 2 × 7-segment display
- High-quality operator cover in stainless steel design
- Networked with Smart Home systems via the HCP interface





BiSecur

As standard with two 4-button hand transmitters HSE 4 BS, textured surface black with chrome caps

Garage door operators	SupraMatic E	SupraMatic P
Bluetooth receiver	Integrated, can be switched on and off	Integrated, can be switched on and off
HCP bus connection	Integrated	Integrated
Cycles per day / hour	25 / 10	50 / 10
Pull and push force	650 N	750 N
Peak force	800 N	1000 N
Max. opening speed	20 cm/s	20 cm/s
Lighting	20 LED	30 LED running light
Max. door width	5500 mm	6000 mm
Max. door surface	13,75 m²	15 m²

* in comparison with ProMatic series 3

Only from Hörmann

European patent

Hörmann BlueSecur



Operation by smartphone using the Hörmann BlueSecur app

Premium quality at an attractive price

- Convenient garage ventilation
- Additional opening height
- Up to 2 times* brighter LED lighting
- Networked with Smart Home systems via the HCP interface

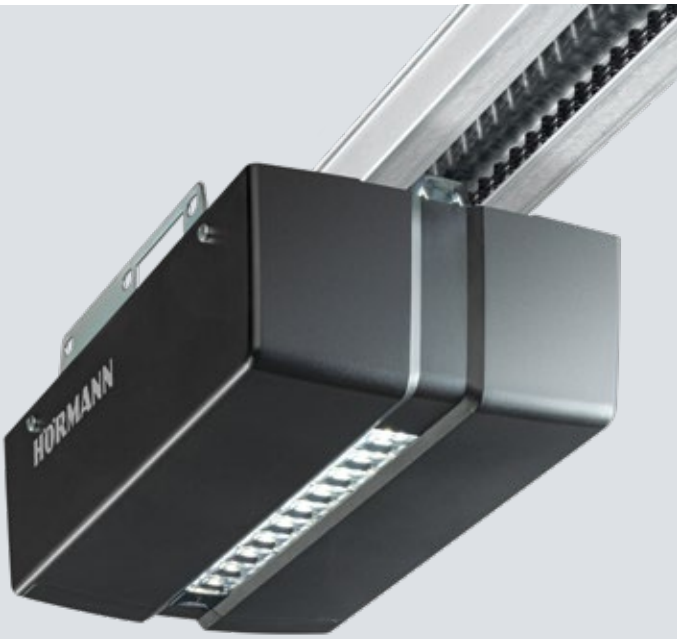



BiSecur

As standard with two 4-button hand transmitters HSE 4 BS, textured surface black with plastic caps

Garage door operators	ProMatic 4	ProMatic 4 Akku
Bluetooth receiver	Optional (HET-BLE)	optional (HET-BLE)
HCP bus connection	Integrated	Integrated
Cycles per day / hour	25 / 10	5 / 2
Pull and push force	600 N	500 N
Peak force	750 N	600 N
Max. opening speed	20 cm/s	16 cm/s
Lighting	10 LED	10 LED
Max. door width	5000 mm	4000 mm
Max. door surface	13,75 m²	9 m²

ProMatic 4 Akku

For garages without power connection



Akku with solar module

Accessories

Hand transmitter

BiSecur



HS 5 BS
4 button functions plus query button, High-gloss black or white

HS 5 BS
4 button functions plus query button, Black texture



HS 4 BS
4 button functions, Black texture

HS 1 BS
1 button functions, Black texture



HSE 1 BS
1 button function, incl. eyelet for key ring, Black texture



HSE 4 BS
4 button functions incl. eyelet for key ring, Black texture with chrome or black plastic end caps



HSE 4 BS
4 button functions incl. eyelet for key ring, High-gloss surface with chrome caps in the colours: White, Anthracite grey, Frozen Grey, **NEW.** Rosegold, Carbon, Silver



HSD 2-C BS
High-gloss chrome, 2 button functions, can also be used as a key ring



HSZ 1 BS / HSZ 2 BS
1 / 2 button functions, for insertion in vehicle cigarette lighter



HSI 3 BS
To control up to 3 doors, with extra-large buttons, impact-resistant housing, protection category: IP 65



HSI 6 BS
To control up to 6 doors, with extra-large buttons, impact-resistant housing, protection category: IP 65

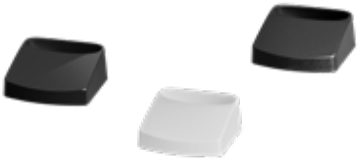

Handheld transmitter station
in high-gloss black or white finish, textured matte black finish
for HS 5 BS, HS 4 BS, HS 1 BS



Handheld transmitter holder
for wall mounting or attachment to the sun visor of a car, transparent,
for HS 5 BS, HS 4 BS, HS 1 BS sowie HSE 1 BS und HSE 4 BS



Radio code switch
FCT 3 BS
3 functions, with illuminated buttons, recessed or surfacemounted fitting possible, plastic housing in Light grey RAL 7040



Radio code switch
FCT 10 BS
10 functions, with illuminated buttons and hinged cover, recessed or surface-mounted fitting possible, plastic housing painted in RAL 9006 White aluminium



Radio finger-scan
FFL 25 BS
2 functions and up to 25 fingerprints, with hinged cover, recessed and surface-mounted fitting possible, plastic housing painted in RAL 9006 White aluminium



Radio internal push button
FIT 1 BS
1 button function with large button for easy operation, plastic housing in Pure white RAL 9010



Radio internal push button
FIT 4 BS
4 button functions, plastic housing in Pure white RAL 9010



Radio internal push button
FIT 5 BS
4 button functions plus query button, plastic housing in Pure white RAL 9010



Radio internal push button
FIT 2-1 BS
2 functions, connection option for max. 2 control elements via cable, e.g. key switch, plastic housing in Pure white RAL 9010



Flush-mounted radio transmitter
2 functions, for flush-mounted push buttons, central installation in the house with visual contact to the garage door

HSU 2 BS: for switch boxes with 55 mm diameter, connected to the house power supply
FUS 2 BS: for switch boxes with 55 mm diameter, including 1.5 V battery



FSR 1 BS wireless radar sensor
1 function, for contactless opening or closing of the garage door, operating voltage 230 V
HTR-1-230 radar sensor
1 function, relay output for connection to a switch cable, operating voltage 230 V
HTR-1-24 radar sensor
Function as HTR 1-230, operating voltage 24 V

Fitting details

For Series 2000 retractable gear for single doors

Position of anchors

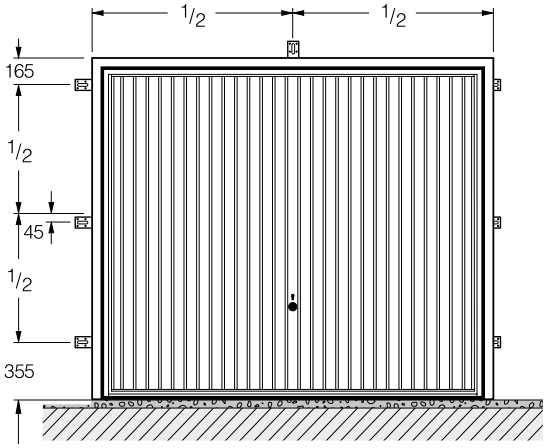

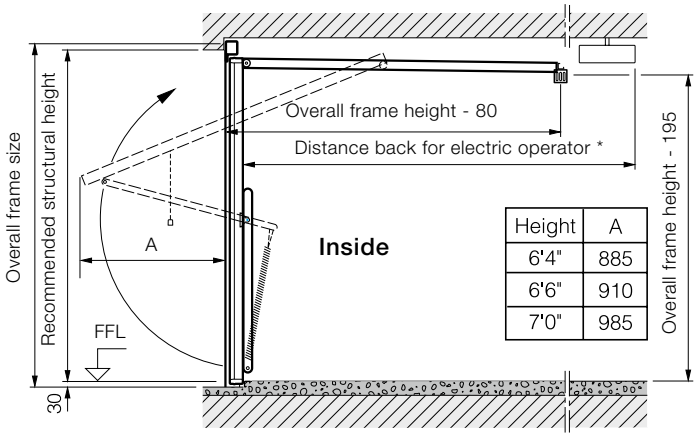

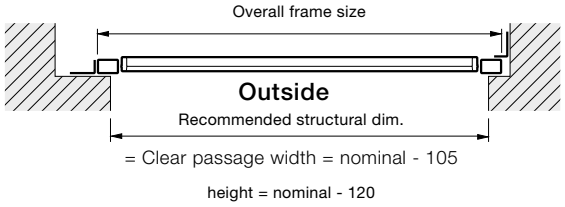

* Distance back for ProMatic / SupraMatic electric operator:
3200 mm up to door height 2500 mm
3450 mm up to door height 2750 mm

Fitting behind the opening

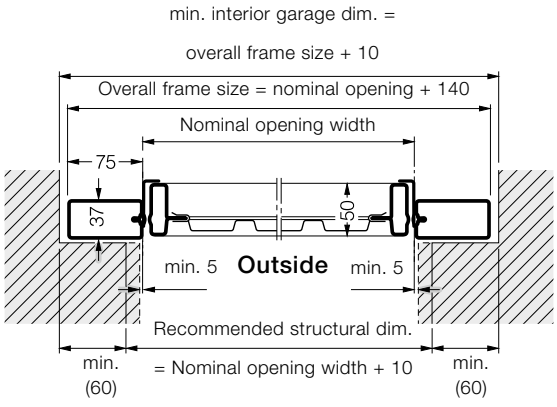

The recommended structural dimensions are recommended planning dimensions. Minimum sideroom, headroom and opening sizes are all based on these dimensions.

Door with flat floor

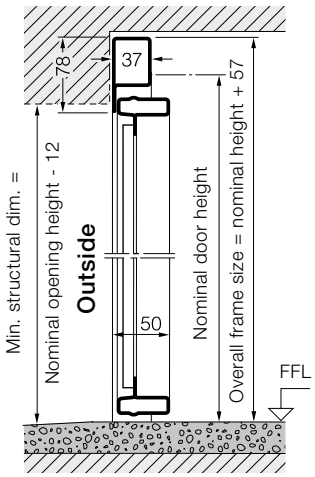

With ProMatic / SupraMatic operator
No additional headroom required.
Exception: some timber designs allow 15 mm clearance.

Fitting in the opening

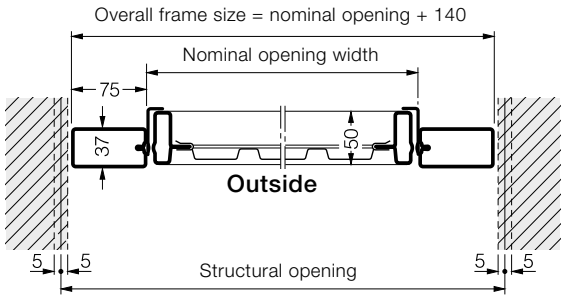

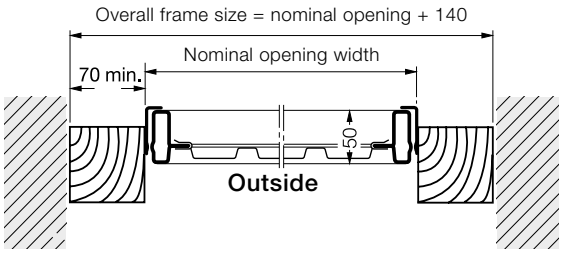

Fitting in the opening requires that the given dimensions be adhered to with greater accuracy.

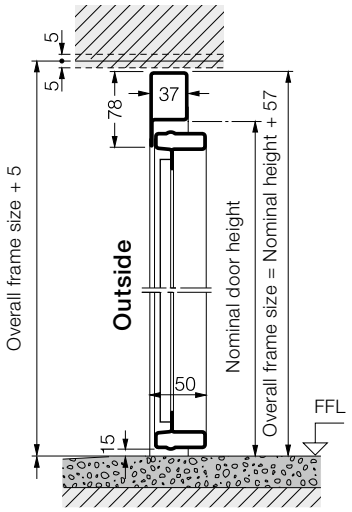

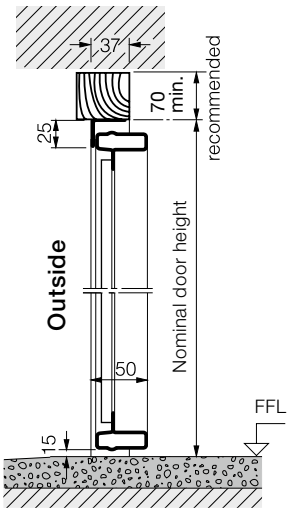

With ProMatic / SupraMatic operator
No additional headroom required.
Exception: some timber designs allow 15 mm clearance.

Fitting details

For Series 2000 canopy gear for single doors

Position of anchors

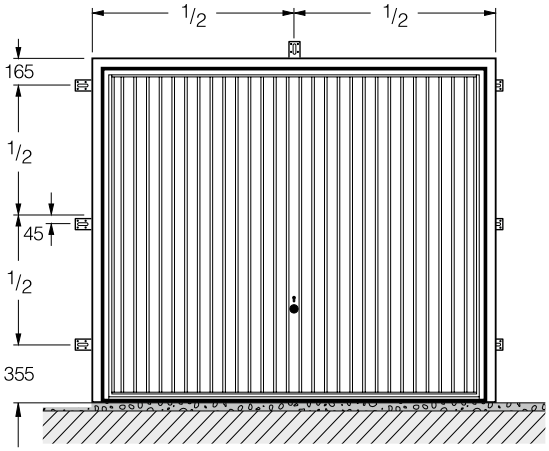

Clear passage
Width: nominal opening less 40 mm (1½") only within bottom 1/3 due to flexible seals.
Height: nominal door height - 140.

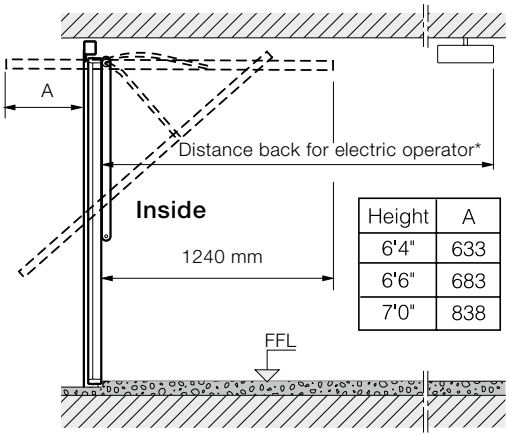

Height	A
6'4"	633
6'6"	683
7'0"	838

For doors with operator 40 mm headroom above top crossframe required.
(Overall frame size + 40 mm)

Fitting behind the opening

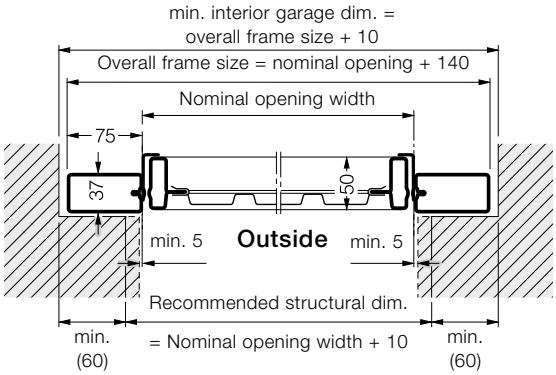

Behind opening installation with the Hörmann steel frame allows for a wider range of structural openings to be spanned, this can be particularly helpful with non-standard openings which would normally require special sized doors. The diagrams show the minimum tolerances that should be adhered to.

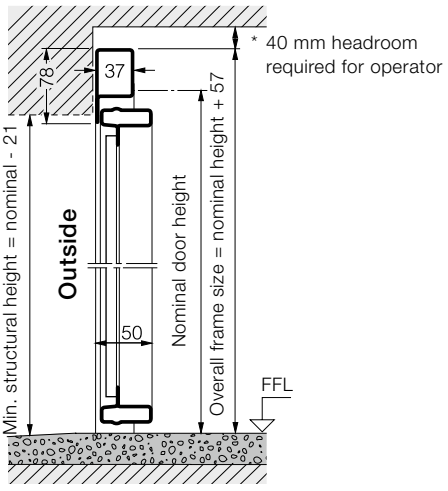

The overall frame sizes are shown as additions to the nominal opening sizes.

Fitting in the opening

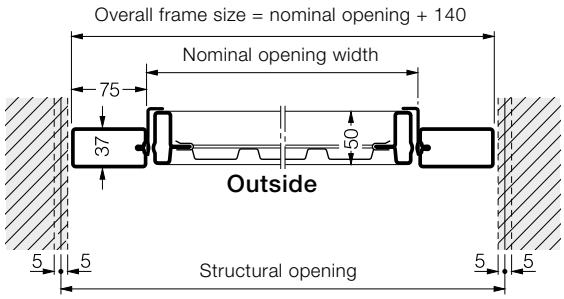

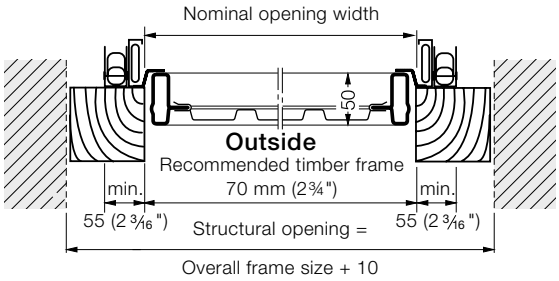

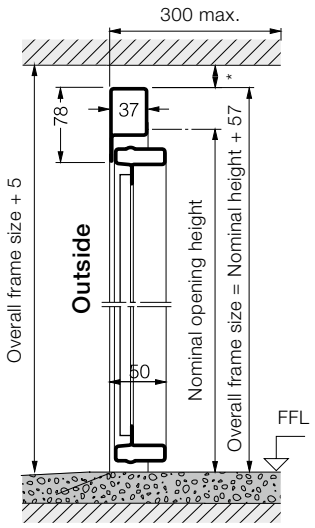

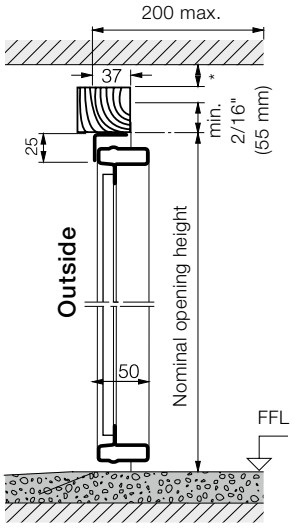

* 40 mm headroom required for operator

The size chart gives the structural opening sizes for each door size, this frame is the standard 2¾" (70 mm) square. A narrow application gear is provided for doors to be fixed to timber frames allowing the frame to be a minimum of 2 2/16" (55 mm) square if required, allowing the door to be fitted to smaller structural opening. For electric operation with canopy door a bow arm must be purchased separately.

For overall dimensions of Hörmann steel frame, add 5½" (140 mm) to nominal opening width and 2¼" (57 mm) to nominal opening height.

Fitting details

For Series 2000 retractable gear for double doors

Position of anchors

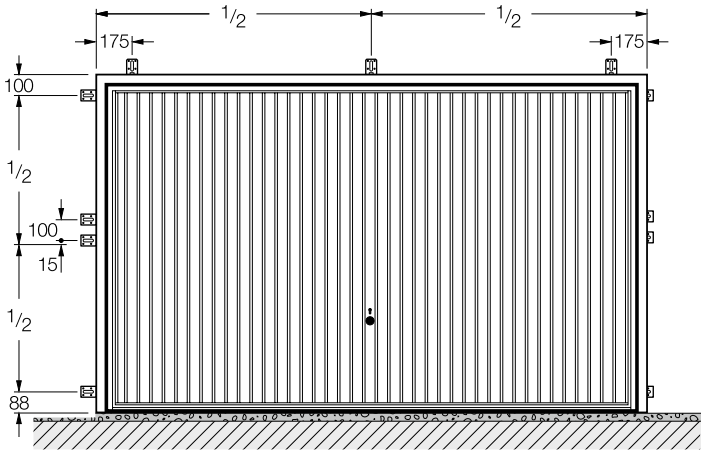

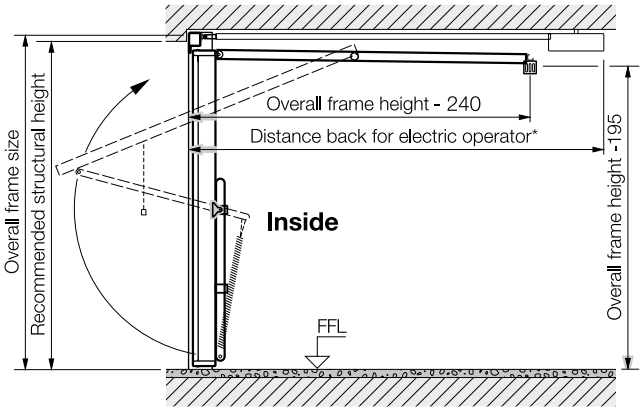

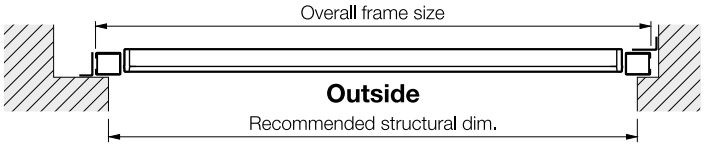

* Distance back for ProMatic / SupraMatic electric operator:
3200 mm up to door height 2500 mm
3450 mm up to door height 2750 mm

Fitting behind the opening

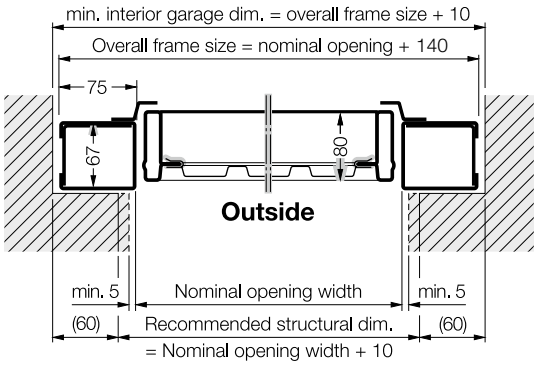

The recommended structural dimensions are recommended planning dimensions. Minimum sideroom, headroom and opening sizes are all based on these dimensions.

Door with flat floor

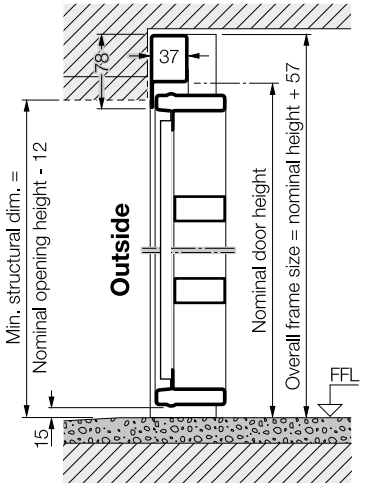

With ProMatic / SupraMatic operator
No additional headroom required.
Exception: some timber designs allow 15 mm clearance.

Fitting in the opening

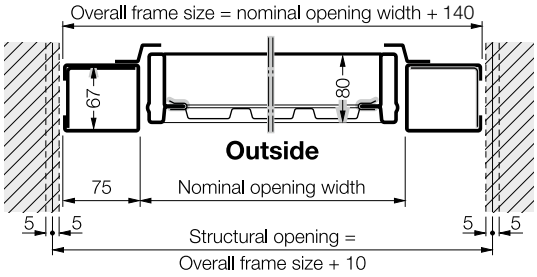

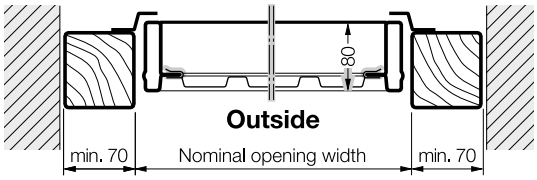

Fitting in the opening requires that the given dimensions be adhered to with greater accuracy.

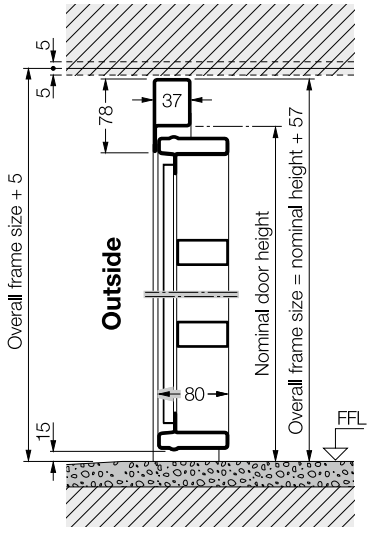

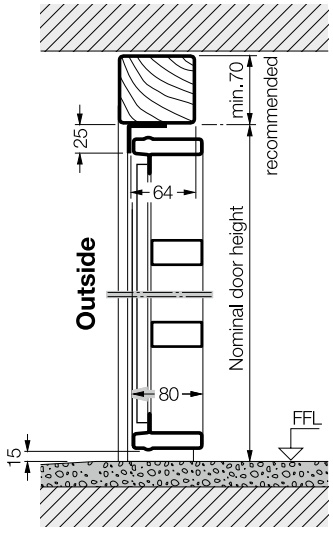

With ProMatic / SupraMatic operator
No additional headroom required.
Exception: some timber designs allow 15 mm clearance.

Fitting details

For Series 2000 garage side doors

Single leaf

Position of anchors

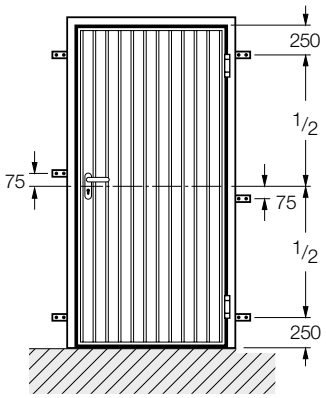

Standard sizes for single-leaf doors (Dimensions in mm)

Ordering size (BR)		Structural opening		Clear passage dimensions			Height of lever handle
					with threshold	without threshold	
Width	Height	Width	Height	Width	Height	Height	from FFL
875	1875	885	1880	830	1837	1852	990
875	2000	885	2005	830	1962	1977	1050
875	2125	885	2130	830	2087	2102	1110
1000	2000	1010	2005	955	1962	1977	1050
1000	2125	1010	2130	955	2087	2102	1110

Standard sizes with steel infill and open-for-infill frames are supplied for external fitting as standard. For internal fitting, fittings can be reversed. Designs with timber infill for external fitting only.

Block frame for fitting into the opening: dimensions and versions on request.

Maximum size range (BR): 1250 x 2375 mm.

Single leaf door with stepped floor

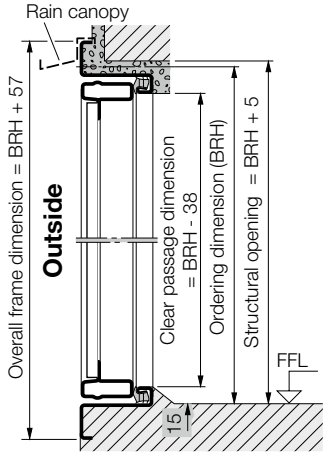

Single leaf door

Supplied with bottom threshold as standard, will be removed on site

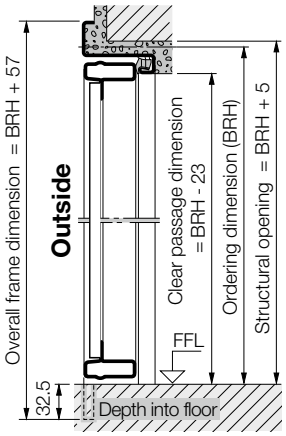

Single leaf door

Supplied without bottom threshold

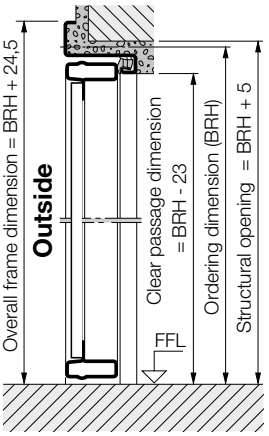

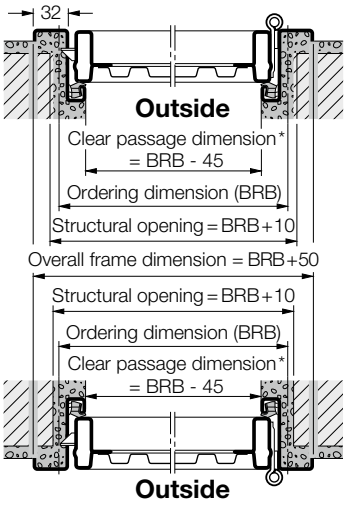

* With an opening angle of less than 180°, the clear passage width is reduced.

Double leaf

Position of anchors

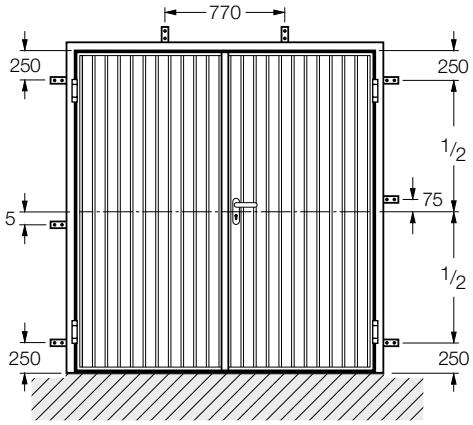

Single leaf, external fitting (standard)

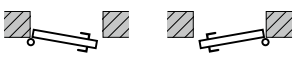

LH hinged RH hinged

Double leaf, external fitting (standard)



LH hinged RH hinged

Single leaf, internal fitting (outside)

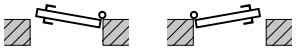

Traffic leaf LH hinged Traffic leaf RH hinged

Double leaf, internal fitting (outside)

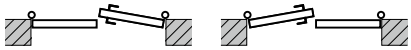

Traffic leaf LH hinged Traffic leaf RH hinged

External fitting with threshold profile.
For internally fitted doors, the threshold angle/ transport angle should always be removed. Adequate water drainage to the outside must then be ensured. For doors on the weather side external fitting is preferable.

Supplied as standard for external fitting, traffic leaf on the right.
State on order if internal fitting or left hand traffic leaf is required.
Equal division of leaves only.

Block frame for fitting into the opening: dimensions and versions on request.

Size range: Width (ordering size) from 1300 to 2500 mm,
Height (ordering size) Panelled designs only up to BRB = 2000 mm.

Door with flat floor

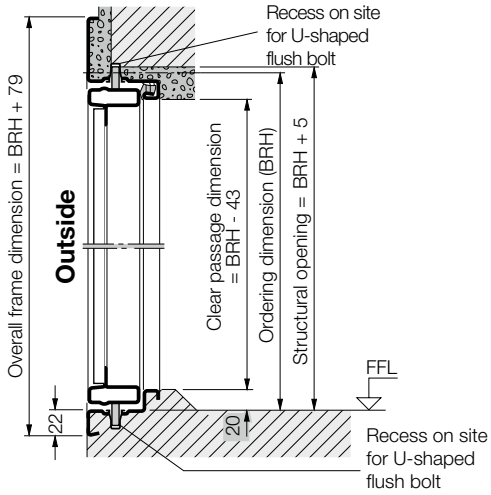

Door with stepped floor

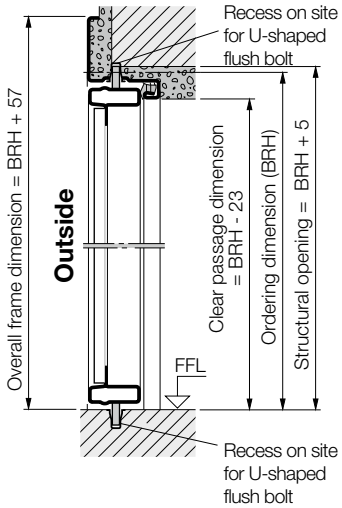

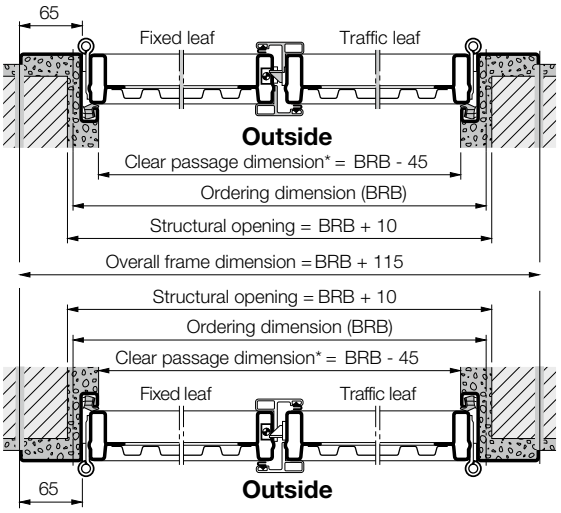

* With an opening angle of less than 180°, the clear passage width is reduced.

Hörmann.
For Life.

Whether you are building your home or modernising it, you desire a place full of joy, security and relaxation. Thanks to their sustainable and particularly durable quality, Hörmann products will become a reliable part of your home – made to last for generations.



GARAGE DOORS. GATE AND DOOR OPERATORS. SMART HOME SYSTEMS. ENTRANCE DOORS. RESIDENTIAL INTERNAL DOORS. LOFT DOORS. STEEL DOORS. DOOR FRAMES. STORAGE SPACE SYSTEMS.







Some of the products shown are equipped with special equipment and do not always correspond to the standard versions. The surface finishes and colours shown are subject to the limitations of the printing process and cannot be regarded as binding. All RAL colour specifications are based on the corresponding RAL colour. All rights reserved. No part may be reproduced without our prior permission. Subject to changes.

Issue 10.2026 / Print 10.2026 / HF 84131 EN / SAP 357601 / G.XX / Printed on 100% recycled paper

HÖRMANN